Available online at www.sciencedirect.com
SCIENCE DIRECT®

C. R. Biologies 326 (2003) 565–574

COMPTES RENDUS BIOLOGIES

Microbiology: Parasitology

The geographical segregation of human lice preceded that of *Pediculus humanus capitis* and *Pediculus humanus humanus*

Zhu Yong [1], Pierre-Édouard Fournier [1], Elena Rydkina, Didier Raoult *

Unité des Rickettsies, IFR48, CNRS UMR 6020, faculté de médecine, université de la Méditerranée, 27, bd Jean-Moulin, 13385 Marseille cedex 5, France

Received 10 May 2003; accepted 11 July 2003

Presented by Jean Rosa

Abstract

In order to investigate human-louse phylogeny, we partially sequenced two nuclear (18S rRNA and EF-1α) and one mitochondrial (COI) genes from 155 *Pediculus* from different geographical origins. The phylogenetic analysis of 18S rRNA and EF-1α sequences showed that human lice were classified into lice from Sub-Saharan Africa and lice from other areas. In both clusters, head and body lice were clearly grouped into two separate clusters. Our results indicate that the earliest divergence within human pediculidae occurred between African lice and other lice, and the divergence between head and body lice was not the result from a single event. ***To cite this article: Z. Yong et al., C. R. Biologies 326 (2003).***

Résumé

La ségrégation géographique du pou humain a précédé celle de *Pediculus humanus capitis* et de *Pediculus humanus humanus*. Afin d'étudier la phylogénie des poux humains, nous avons partiellement séquencé deux gènes nucléaires (ARNr 18S et EF-1α) et un mitochondrial (COI) chez 155 *Pediculus* d'origines géographiques diverses. L'analyse phylogénique des séquences des gènes ARNr 18S et EF-1α a montré que les poux d'Afrique sub-saharienne étaient différents des poux d'autres origines. Dans ces deux groupes, les poux de tête et de corps étaient clairement séparés. Nos résultats montrent que la divergence initiale au sein des poux humains est survenue entre ceux d'Afrique et les autres, et que la divergence entre poux de tête et de corps n'a pas résulté d'un seul événement. ***Pour citer cet article : Z. Yong et al., C. R. Biologies 326 (2003).***

Keywords: Pediculus humanus; identification; taxonomy; gene sequences; genotypic criteria

Mots-clés : Pediculus humanus ; identification ; taxonomie ; séquences nucléotidiques ; critères génotypiques

* Corresponding author.
E-mail address: didier.raoult@medecine.univ-mrs.fr (D. Raoult).

[1] These two authors contributed equally to this work.

1631-0691/$ – see front matter
doi:10.1016/S1631-0691(03)00153-7

1. Introduction

Three thousand louse species have been described [1] and all are classified within the order *Phthiraptea*, which is divided into four groups: *Rhyncophthirina, Amblycera, Ischocera* and *Anoplura* (or sucking lice) [2,3]. *Anoplura* are obligate permanent hematophagous parasites of mammals and over 500 species are recognized parasites of all major groups of eutherian mammals, including humans [4]. It is believed that mammalian hosts and their parasite lice have coevolved since the Late Cretaceous period. Indeed, lice have frequently been used as a paradigm of host–parasite coevolution, as louse species are associated with specific hosts [5,6]. Currently, three louse species are specifically associated with humans and have been described according to their location on humans. The pubic or crab louse, *Phthirus pubis*, belongs to the *Phthiridae* family, is found on the pubic hair and is physically different from the other human lice [7]. The *Pediculidae* family comprises the body louse and the head louse. The head louse, *Pediculus humanus capitis*, lives on the head hair whereas the body louse, *Pediculus humanus humanus* lives in unwashed clothes. Lice have been recognized as human parasites for some thousands of years [8–19]. Whether modern human pediculidae evolved from a single ancestor associated with early hominidae and spread with major expansions of human populations [20] is likely but not demonstrated. It has been suggested that the head louse is the ancestor form that subsequently invaded clothing [21]. Anatomic differences characterize head or body lice [21] and some authors have also suggested that different strains of head lice evolved in different parts of the world following geographical isolation [3] that are closely associated with hosts of particular racial origin [22,23]. However, other authors have proposed that these differences were due to distortion of exoskeleton during the mounting of specimens [24]. A controversy exists on the monophyletic origin of body or head lice. Do body and head lice belong to a single species or not?

To date, few genes or intergenic sequences have been studied for sucking lice: cytochrome oxidase I (COI) [25], cytochrome *b* (*Cyt*b) [26], elongation factor-1α (EF-1α) [27], 12S rRNA [28], 18S rRNA [29], and two internal transcribed sequences (ITS1 and 2) [30]. Among these genes, the 18S rRNA, EF-1α and COI have demonstrated to be valuable phylogenetic tools for *Phthiraptera* [27,29]. Using COI sequences, Leo et al. have suggested that human head and body lice are conspecific rather than issued from monophyletic lineages [25]. However, this analysis was based on the study of only one gene, which thus may not necessarily represent the true phylogeny of these lice. In order to estimate the phylogenetic organization of human pediculidae and determine whether head and body lice belong to the same species, we partially sequenced the 18S rRNA of 155 *Pediculus* lice from different geographical areas and then the EF-1α and COI genes from 20 of these lice.

2. Material and methods

2.1. Louse collection

One hundred and fifty five adult human lice from 13 geographical origins were included in the 18S rRNA study. In order to validate the phylogenetic organization obtained from the 18S rRNA analysis, we sequenced the EF-1α and COI genes of 28 lice for which DNA remained. Lice were provided by local physicians who collected them from indigenous patients infested with only one type of lice: either head or body lice. The origin and number of studied lice is detailed in Table 1. Lice were conserved at $-20\,^{\circ}$C until processed further.

2.2. DNA extraction, PCR amplification and sequencing

DNA was extracted from mechanically crushed lice using Qiagen columns (QIAamp tissue kit; QIAGEN, Hilden, Germany) according to the manufacturer's instructions. A 1472- to 1493-bp fragment of the 18S rRNA gene was PCR-amplified using the 18SAIGD consensus primer determined after alignment of 18S rRNA gene sequences of *Drosophila melanogaster* (Genbank accession number M21017) and *Aedes aegypti* (Genbank accession number M95126), and the 18SBI reverse primer described by DeSalle et al. [31]. A 348-bp fragment of the EF-1α gene was amplified using the primers EFl-For3 and EF1-Cho10 [32]. A 524-bp fragment of the COI gene was amplified using the primers C1-J-1718 [33]

Table 1
Location and hosts of the lice included in this study

Country	Type	Host	18S rRNA GenBank accession number	EF-1α GenBank accession number	COI GenBank accession number
Burundi	Head	6 from 2 separate hosts	AY236413	AY239280	Identical to AY239286
	Body	10 from 3 separate hosts	AF139486	AY239283	Identical to AY239286
Rwanda	Head	2 from 1 host	AY236415	AY239281	Identical to AY239286
	Body	2 from 1 host	AY236412	AY239284	Identical to AY239286
Zimbabwe	Body	2 from 1 host	AF139482	AY239282	AY239285
Algeria	Body	16 from 6 hosts	AY236411	AY239275	Identical to AY239286
Tunisia	Body	1 from 1 host	AF139488	ND	ND
Peru	Body	27 from 9 hosts	AF139481	AY239279	Identical to AY239286
The Netherlands	Body	14 from 2 hosts	AY236416	ND	ND
United States of America	Body	2 from a laboratory colony	AF139480	AY239277	Identical to AY239286
Portugal	Head	10 from 5 hosts	AY236414	AY239272	AY239288
France	Head	2 from 1 host	AY236410	AY239274	Identical to AY239286
	Body	9 from 2 hosts	AF139478	AY239276	AY239287
Russia	Head	1 from 1 host	AF139484	ND	ND
	Body	10 from 2 hosts	AF139479	AY239278	AY239286
China	Head	25 from 11 hosts	AY236417	AY239273	Identical to AY239286
Thailand	Head	16 from 5 hosts	AY236418	AY239271	Identical to AY239286

ND = sequence not determined.

Table 2
Primers used in this study

Gene	Primer name (reference)	Primer sequence (5′–3′)	Annealing temperature[‡]
18S rRNA	18SAIDG[*†]	TCTGGTTGATCCTGCCAGTA	58 °C
	18SBI[*†] [31]	GAGTCTCGTTCGTTATCGGA	58 °C
	18SBIDG[†]	ATTCCGATTGCAGAGCCTCG	
	18SAI3D[†]	TATTAAAGTTGCTGCGGATA	
	18SBIMR[†]	GGTTCGGCCTGCTTTAAGCA	
	18SAI4D[†]	GGAGGTTCGAAGGCGATCAG	
EF-1α	EF1-For3[*†] [32]	GGNGACAAYGTTGGYTTCAACG	60 °C
	EF1-Cho10[*†] [32]	ACRGCVACKGTYTGHCKCATGTC	60 °C
COI	C1-j-1718[*†] [33]	GGAGGATTTGGAAATTGATTAGTTCC	60 °C
	C1-N-2191[*†] [25]	CCAGGAAGAATAAGAATATAAACTTC	60 °C

[*] Primers used for PCR amplification.
[†] Primers used for sequencing.
[‡] Annealing temperature is indicated for primers used for PCR only.

and C1-N-2191 [25]. All primers used in this study are shown in Table 2. Each PCR was carried out in a Peltier PTC-200 model thermal cycler (MJ Research Inc., Watertown, Mass.). 3 µl of each DNA preparation were amplified in a 50-µl reaction mixture containing 50 pM of each primer, 200 µM (each) dATP, dCTP, dGTP and dTTP (Invitrogen, Gaithersburg, USA); 1U eLONGase (Invitrogen); 2 µl of eLONGase buffer A (Invitrogen) and 8 µl of eLONGase buffer B (Invitrogen). The following conditions were used for amplification: initial 3 min of denaturation at 94 °C, followed by 40 cycles of denaturation for 30 s at 94 °C, annealing for 30 s at various temperatures, as indicated in Table 2, and extension for 1 min at 68 °C. Amplification was completed by holding the reaction mixture for 3 min at 68 °C to allow complete extension of the PCR products. PCR products were purified using QIAquick Spin PCR purification kits (QIAGEN) as described by the manufacturer. Sequencing reactions were carried out using the d-Rhodamine Terminator cycle-sequencing ready reaction with Amplitaq Polymerase FS (Perkin-Elmer, Coignieres, France),

as described by the manufacturer. For all PCR products, the sequences of both DNA strands were determined twice. Sequencing products were resolved using an ABI 3100 automated sequencer (Perkin-Elmer). Sequence analysis was performed with the software package ABI Prism DNA Sequencing Analysis Software version 3.0 (Perkin-Elmer).

2.3. Sequence analysis

DNA sequences from each gene were aligned using the multisequence alignment software CLUSTAL W, version 1.81 [34]. Percentages of similarity were determined using the MEGA software package. Unrooted phylogenetic trees were obtained from DNA sequences by using the maximum parsimony method (DNAPARS software in the 3.4 version of PHYLIP software [35], distance methods (DNADIST: distance matrix with Kimura 2 parameter [36]; and NEIGHBOR: Neighbour-Joining [37]) and the maximum likelihood method (DNAMLK software in PHYLIP). Bootstrap replicates were performed to estimate the node reliability of the phylogenetic trees obtained by the three methods [38]. The bootstrap values were obtained from 100 trees [39] generated randomly with SEQBOOT and CONSENSE in the PHYLIP software package. Only values above 75 were considered significant. Trees were drawn using the TreeView version 1.5 [40] software. Only the parsimony trees are presented in this article. Using the same methods, we also analyzed various combinations of the three genes, i.e. 18S rRNA + EF-1α, 18S rRNA + COI, EF-1α + COI, and 18S rRNA + EF-1α + COI.

3. Results

3.1. 18S rRNA gene sequences

The size of 18S rRNA gene PCR products ranged from 1472 bp (Burundi and Rwanda) to 1492 bp (China) for head lice and from 1472 bp (Burundi and Rwanda) to 1493 bp (Zimbabwe) for body lice. Nucleotide differences were observed at 90 positions among tested lice. When several lice of one type (i.e. head or body lice) from a given country were tested, they exhibited identical DNA sequences. We did not identify any specific sequence signature allowing the discrimination between body and head lice, but rather observed sequence signatures distinguishing sub-Saharan lice from other lice at nine nucleotide positions (Fig. 1a).

Among sub-Saharan lice, head lice from Burundi and Rwanda exhibited identical 18S rRNA gene sequences. Body lice from Burundi and Rwanda also exhibited identical 18S rRNA gene sequences but differed at 42 positions (97.2% similarity) from Zimbabwean body lice. Head and body lice from Burundi and Rwanda exhibited nearly identical sequences, with only one nucleotide difference (Fig. 1a).

Among lice from all areas except sub-Saharan Africa, the 18S rRNA gene similarity among head lice ranged from 99.1 to 99.9% and the similarity among body lice ranged from 99.7 to 100%. Head lice differed from body lice at 21 positions (98.6% similarity) (Fig. 1a).

3.2. EF-1α gene sequences

For all 28 lice tested, the size of EF-1α PCR products was 348 bp, of which 116 (33%) were variable and 103 (30%) parsimony informative. When several lice of one type (i.e. head or body lice) from a given country were tested, they exhibited identical DNA sequences. When comparing head and body lice regardless of their geographical origin, we observed no discriminant sequence signature, but rather observed differences distinguishing sub-Saharan lice from others at 67 positions (81% similarity) (Fig. 1b).

Among sub-Saharan lice, head lice from Burundi and Rwanda exhibited identical EF-1α gene sequences. Body lice from Burundi and Rwanda were also identical but differed at one position (99.7% similarity) from Zimbabwean body lice. Head lice from Burundi and Rwanda differed at five positions (98.5% similarity) from body lice from the same countries (Fig. 1b).

Among lice from all areas except sub-Saharan Africa, the EF-1α gene similarity ranged from 95.5 to 99.1% among head lice and from 89.9 to 100% among body lice. Head and body lice differed at 18 positions (94.8%) (Fig. 1b).

3.3. COI gene sequences

The size of COI PCR products was 524 bp for all lice. All sequences were identical except those

a

18S rRNA

Base number	229-230	230-232	234-238	240	242	243	245-246	260	296-297	508	743	752	772	796-797	809	851	852-853	946	1390
Sub-Saharan lice	Insertion TA or CA	TCA	TCGTT	G	A	T	insertion CA or TA	A			T	C	deletion or T		C	T		C	A
Head lice										T									
Body lice										G									
Lice from the World						C		T		G									G
Head lice		deletion	deletion	A	T				insertion T		A	A	G	insertion GCG	C	A	insertion TG	A	
Body lice		TCG	TCGAA	G	A						T	C	T		T	T		C	

b

EF-1α

Base number	18	21	24	30	36	37	42	45	48	51-52	54	57	60	63	66	69	70-72	74-75	78	81	83	88	89-90	93	96	105	108	111	120	126	129	130-131
Sub-Saharan lice	A	A	A	A		T	T	T	T	CG	T	A		T	A		AAA	CT	A	T	A	C	TT	T	G	G	A	T	A	A	A	AA
Head lice					A								T			A																
Body lice					G								C			C																
Lice from the World	C	G	G	C	C or T	A	C	C	G	TT	C	G	T or C	C		C			T	C	C		AG	C			C	C		C	G	GC
Head lice															G	G	GCC	AG				A			A	C			T			
Body lice															A	A	AAG	CT				C			G	G or T			A or C			

132	135	141	147	150	156	159	162	171	177	180	183	189	195	201	202-203	216	219	223	225	226-227	228	231	234	235-236	249	255	261	264	273
C	A	T	A	A	T	T	G	A	T	A	T	A	A	A	TG	A	A	A	A	AC	C	A	A	AA	T	A	T	A	T

T or G		C		C or G	C	C	C or T	T	C	G	C	G		G		T or C	G, C or T	T	C	GT			C		C	T or C		C	C
	T / A or C		C / T										G / C		GT / TG					deletion / G	C / T	A / G		GC / AA			C / T		

277	282	285-286	288	291	292	305	306-307	313	318	321	324	330	339	345
T	T	AT	T	A	C	A	AT	T	A	T	G	A	T	T

A		CA	C	G			GA	A	C or G	C	C or A	C	C	C
	C / T				T / C	A / G								

Fig. 1. Signature mutations in the 18S rRNA (**a**) and EF-1α (**b**) gene sequences of *Pediculus humanus* allowing the identification of head an body lice from sub-Saharan Africa or other areas. 18S rRNA sites were numbered according to the body louse from France and EF-1α sites were numbered according to the alignment of sequences. Nucleotides specific of a given group are underlined.

from the French and Zimbabwean body lice, which exhibited one nucleotide difference by comparison with the other tested lice and the Portuguese head lice, which differed from other lice by 19 bases.

3.4. Phylogenetic analysis

The dendrograms obtained using 18S rRNA sequences with the three different tree-building methods exhibited similar organizations. Two clades were clearly distinct: (*i*) lice from America, Europe, Asia and North Africa clustered together but divided into two sub-groups, one made of head lice and the other comprising body lice; (*ii*) lice from sub-Saharan Africa clustered together and Burundian lice also divided into head and body louse subgroups. At the nodes where head lice diverged from body lice bootstrap values were above 75% (Fig. 2). The phylogenetic organization based on EF-1α sequences showed the same organization for lice from America, Europe, Asia and North Africa, which were sub-divided into two sub-groups, one made of head lice and the other comprising body lice. However, within lice from sub-Saharan Africa, body lice from Zimbabwe and Burundi were grouped together in a cluster different from that made of Burundian head lice. Both clades of sub-Saharan lice and lice from other areas were supported by 100% bootstrap values and the nodes where head lice diverged from body lice exhibited bootstrap values above 90% (Fig. 3b). The dendrograms obtained with the three different tree-building methods exhibited similar organizations. The phylogenetic analysis using amino acid sequences derived from EF-1α nucleotide sequences showed organizations similar to those obtained from nucleotide sequences. Due to the conservation of COI sequences, any combination of genes including the COI gene provided both similar organization and similar bootstrap values than without this gene (data not shown). In contrast, the combination of 18S rRNA and EF-1α sequences provided the same phylogenetic classification using all three analysis methods and 18 of the 20 nodes were supported by bootstrap values equal to or greater than 90% (Fig. 3c).

4. Discussion

In order to study the phylogenetic organization of *Pediculus humanus capitis* and *Pediculus humanus humanus*, we collected 155 human lice from patients suffering only one type of infestation, head or clothing, in order to avoid confusion, as patients who are heavily infested with body lice may also have these ectoparasites on the head. The current taxonomic position of human lice is unclear, as their description and phylogenetic classification have mostly been based on morphological criteria [41–43]. Subtle differences in color and size of different body parts have been reported: head lice were described as being smaller and more heavily pigmented than body lice [3] and as having a shorter femur size [21]. Some authors have reported that the color of head lice may vary according to their hosts and have suggested that it could be the genotypic result of coevolution with different human races [3,22,23], whereas others have proposed that this phenomenon to be only phenotypic, i.e. the darkening of the louse being a form of camouflage which depends on the color of the host's skin and hair [4]. Over recent years, several phylogenetic studies have been conducted on lice, based on the analysis of various genes [25–30]. Among these studies, two have specifically been dedicated to human pediculidae; Leo and Barker, using the ITS2 spacer, have observed that these sequences were present in more than one copy in some lice and were highly variable among lice and even in a single louse, making this tool unsuitable for phylogenetic purposes [30]; the same authors then studied a fragment of the COI gene and suggested, on the basis of the classification of lice from various geographical areas into 10 genotypes due to a high variability of these sequences, that human body and head lice do not represent reciprocally monophyletic lineages and thus, were conspecific [25]. However, these assumptions were based on the study of only one gene and some sequences were obtained from a single DNA strand. As phylogeny based on a single gene may not represent the species phylogeny, due to various biological processes such as hybridization [44,45], differences in lineage sorting [46] and gene duplication [47], we selected three genes, i.e. the 18S rRNA which has previously been used in a multiple gene phylogenetic study of *Isochnera* [29], the EF-1α, which has proven to be useful to infer the phylogenetic relationships among major groups of lice [27,29], and the COI gene, which had previously been used for human lice [25]. This combination of genes had previously been used to infer phylogenetic relationships among *Isochnera* [29].

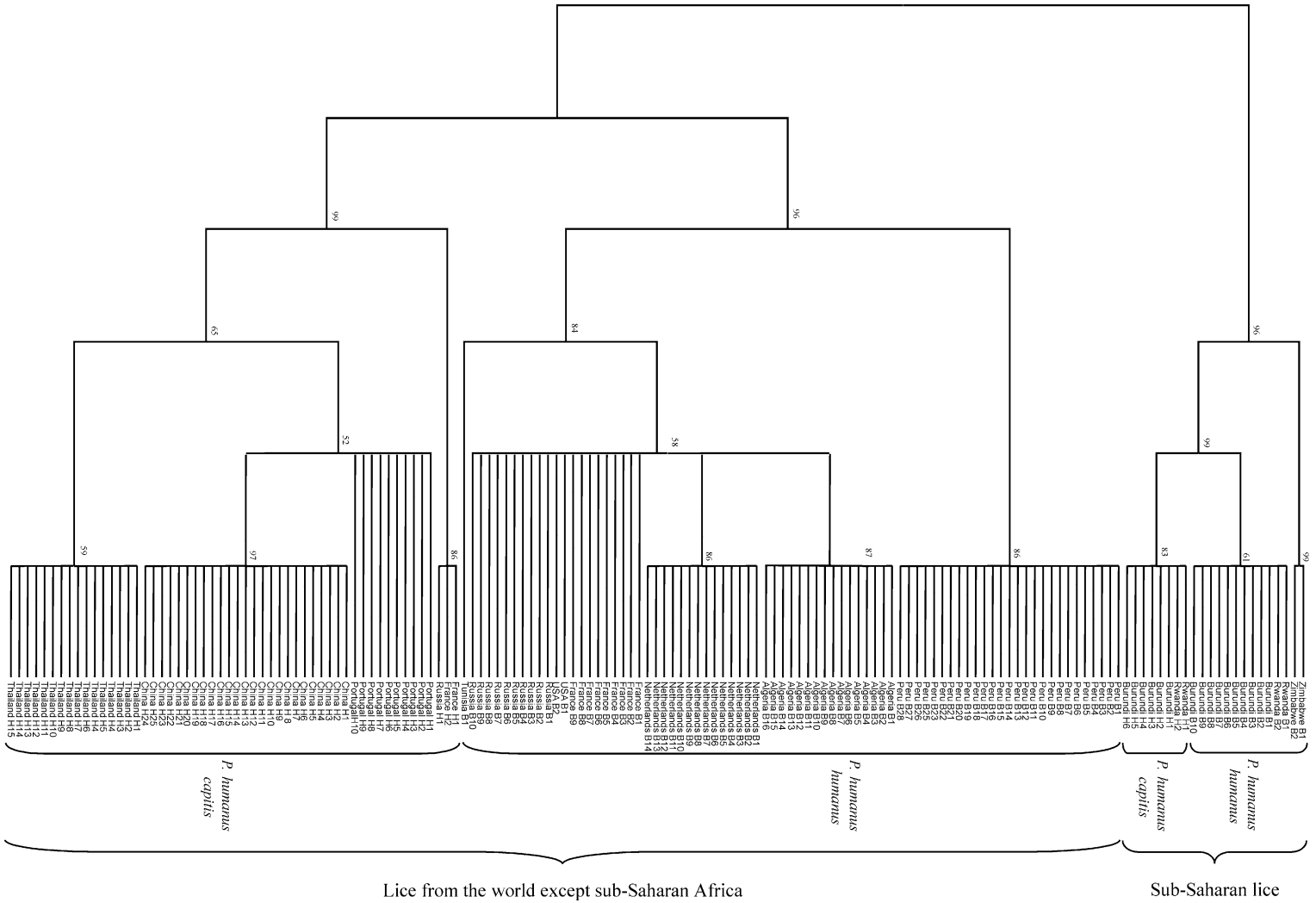

Fig. 2. Unrooted cladogram representing the phylogenetic relationships between 155 human lice inferred from the comparison of 18S rDNA sequences using the parsimony method. The numbers at the nodes are the proportion of 100 bootstrap resamplings that support the topology shown. The names of lice appear in the tree as country of origin followed by B for body lice or H for head lice and the louse number.

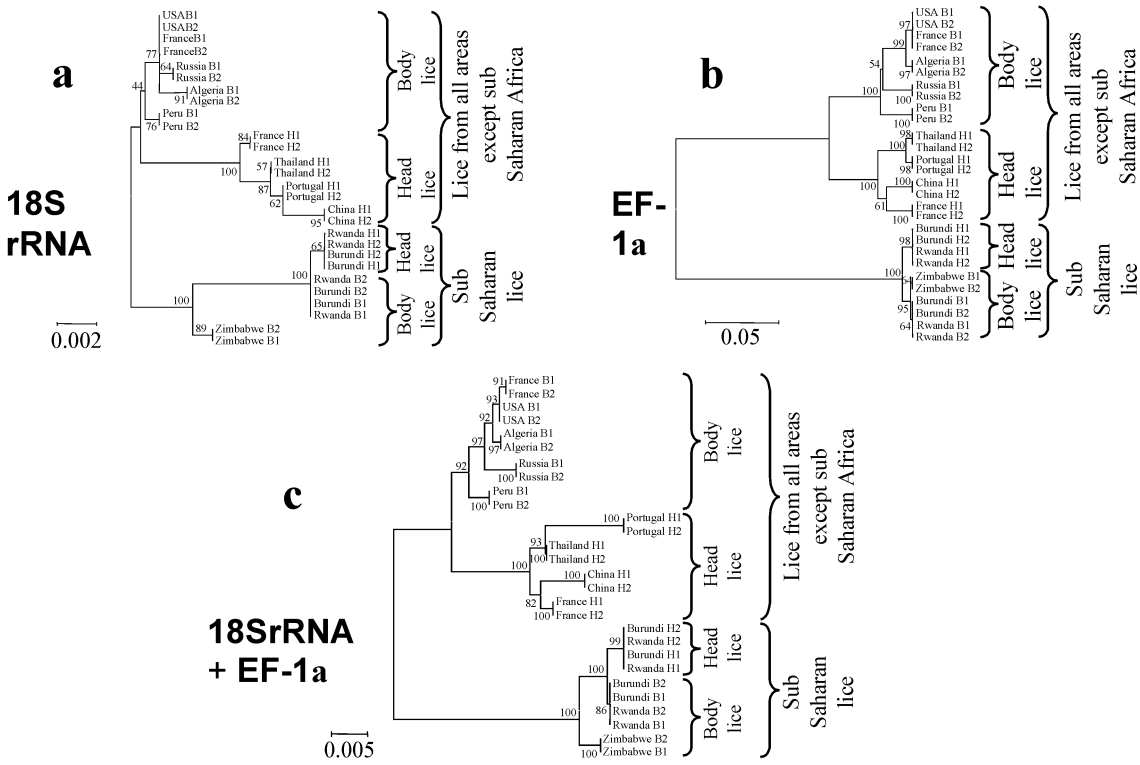

Fig. 3. Unrooted cladograms representing the compared phylogenetic relationships between 16 human body and 12 head lice inferred from the comparison of fragments of the 18S rDNA (**a**), EF-1α (**b**), and 18S rDNA + EF-1α (**c**) genes using the Neighbour-Joining method (Kimura 2 parameter). The numbers at the nodes are the proportion of 100 bootstrap resamplings that support the topology shown. The names of lice appear in the trees as country of origin followed by B for body lice or H for head lice and the louse number. The scale bars represent 0.2%, 5% and 0.5% differences in nucleotide sequences for the 18S rDNA (**a**), EF-1α (**b**), and 18S rDNA + EF-1α (**c**) trees, respectively.

A surprise came from the analysis of the COI gene, which we found highly conserved among human lice from various geographical origins, in contrast with the findings of Leo et al. [25], and which was clearly not suitable to infer phylogenetic relationships among these insects. As sequences from each louse were determined four times (i.e. each DNA strand was sequenced twice), we believe that our data are reliable.

Using 18S rRNA sequences, we found no signature mutations differentiating head and body lice regardless of their geographical origin, but rather signature mutations specific for two groups: sub-Saharan lice and lice from other areas (Fig. 1). In addition, within each of these two groups, additional signature sequences supported the separation of head and body lice. The analysis of EF-1α sequences revealed a large variability of this gene among human lice and confirmed the 18S rRNA analysis. Such signature sequences may help scientists to precisely identify human lice. The phylogenetic study using the 18S rRNA gene showed an organization in accordance with the signature mutations observed in the sequences. This organization was also supported by the analysis of the EF-1α gene, which was highly variable among lice and allowed us to infer a strongly supported phylogenetic classification. We observed that the first divergence among lice was between lice from sub-Saharan Africa and those from all other locations as geographically distant as America, Europe, Northern Africa and Asia. European, American and North African lice clustered together with high bootstrap values. African lice were closely related but differed from the other clade. This divergence and heterogeneity had not been expected because it was believed that lice had been homogeneously exchanged on earth through widespread outbreaks. This exchange may have happened between Europe, Asia,

America and Northern Africa, as we observed that lice from these areas were closely related. It would be interesting to study the DNA from American mummies' lice [48] to check their phylogenetic position compared to current American lice.

Our data support the divergence of body and head lice to be the result of two distinct events, whereas it was thought that this was a single split [21]. This observation contradicts the current classification into either two species or subspecies, namely *Pediculus humanus corporis* and *Pediculus humanus capitis*. It has been suggested that Asia was potentially the source of human lice [4]. Based on our data, this hypothesis appears unlikely. It is likely that hominidae have evolved from ancestors in Africa [20]. If the association of lice with early hominidae occurred as the result of a single event, we speculate that this may have occurred in Africa, with two louse populations having evolved from these ancestor lice, one African louse population associated with sub-Saharan human African populations and another louse population that may have spread with the major expansions of human populations from Africa [20]. Our data also support the hypothesis that the divergence between current head and body lice occurred as the result of two distinct events, one among sub-Saharan lice and one among lice associated with hominidae, who subsequently spread throughout the world.

Finally, we provide a molecular tool for the identification of human lice. In addition, the phenotypic classification within the *Pediculidae* family into two groups, namely *P. humanus capitis* and *P. humanus humanus*, does not match with our genetic data, as these do not support the continued description of two species or subspecies. We believe that the extension of our work to the testing of lice from other sources and the testing of additional genes may contribute to a better understanding of the relationships between humans and their lice.

Acknowledgements

We thank J.B. Ndihokubwayo, J. Kinigi, P.J. Kelly, J.P. Gonzalez, Z.X. Liang, and F. Bacellar for providing us with lice.

References

[1] C.E. Hopla, L.A. Durden, J.E. Keirans, Ectoparasites and classification, Rev. Sci. Tech. Off. Int. Epiz. 13 (1994) 985–1017.

[2] D. Raoult, V. Roux, The body louse as a vector of reemerging human diseases, Clin. Infect. Dis. 29 (1999) 888–911.

[3] I.F. Burgess, Human lice and their management, in: J.R. Baker, R. Muller, D. Rollinson (Eds.), Advances in Parasitology, Academic Press Ltd, London, 1995, pp. 271–342.

[4] J.W. Maunder, The appreciation of lice, Proc. R. Inst. Great Britain 55 (1983) 1–31.

[5] M.S. Hafner, R.D.M. Page, Molecular phylogenies and host-parasite cospeciation: gophers and lice as a model system, Phil. Trans. R. Soc. Lond. B. 349 (1995) 77–83.

[6] S.C. Barker, Phylogeny and classification, origins, and evolution of host associations of lice, Int. J. Parasitol. 24 (1994) 1285–1291.

[7] C.K. Kim, H.W. Ludwig, The family classification of the Anoplura, Syst. Entomol. 3 (1978) 249–284.

[8] R. Hoeppli, *Pediculus humanus* and phthiriasis in early Chinese and European medicine, in: Parasites and Parasitic Infections in Early Medicine and Science, University of Malaya Press, Singapore, 1959, pp. 342–359.

[9] L.C. Parish, History of pediculosis, in: M. Orkin, H.I. Maibach (Eds.), Cutaneous Infestations and Insect Bites, Marcel Dekker, New York, 1985, pp. 159–162.

[10] J.P. Sadler, Records of ectoparasites on humans and sheep from viking-age deposits in the former Western settlement of Greenland, J. Med. Entomol. 27 (1990) 628–631.

[11] G. Sveinbjarnardottir, P.C. Buckland, An uninvited guest, Antiquity 58 (1983) 127–130.

[12] H.E. Ewing, Lice from human mummies, Science 60 (1924) 389–390.

[13] A. Araujo, L.F. Ferreira, N. Guidon, N. Maues da Serra Freire, K.J. Reinhard, K. Dittmar, Ten thousand years of head lice infection, Parasitol. Today 16 (2000) 269.

[14] H. Zinsser, Rats, lice, and history, Broadway House, London, 1935.

[15] J. Bresciani, N. Haarlov, P. Nansen, G. Moller, Head louse *Pediculus humanus capitis* from mummified corpses of Greenlanders about A.D. 1460, Acta Entomol. Fenn. 42 (1983) 24–27.

[16] G.W. Gill, D.W. Owsley, Electron microscopy of parasite remains on the pitchfork mummy and possible social implications, Plains Anthropol. 30 (1985) 45–50.

[17] K.Y. Mumcuoglu, J. Zias, Head lice, *Pediculus humanus capitis* (Anoplura, Pediculidae) from hair combs excavated in Israel and dated from the first century BC to the eighth century AD, J. Med. Entomol. 25 (1988) 545–547.

[18] R.L. Palma, Ancient head lice on a wooden comb from Antinoë, Egypt, J. Egypt. Archaeol. 77 (1991) 194.

[19] K.J. Reinhard, J. Buikstra, Louse infestation of the Chiribaya culture, Southern Peru: variation in prevalence by age and sex, Mem. Inst. Oswaldo Cruz 98 (2003) 173–179.

[20] A.R. Templeton, Out of Africa again and again, Nature 416 (2002) 45–51.

[21] J.R. Busvine, Biology of the parasites, in: M. Orkin, H.I. Maibach (Eds.), Cutaneous Infestations and Insect Bites, Marcel Dekker, New York, 1985, pp. 163–174.
[22] W. Eichler, Three new forms of head lice from New Guinea, Java and South West Africa, Dermatol. Wochenschr. 133 (1956) 657–660.
[23] W. Eichler, Problems with head lice 1. The systematic rank of *Pediculus capitis*, Angew. Parasitol. 23 (1982) 102–109.
[24] G.F. Ferris, Contributions toward a monograph of the sucking lice, Biol. Sci. 2 (1935) 529–608.
[25] N.P. Leo, N.J. Campbell, X. Yang, K. Mumcuoglu, S.C. Barker, Evidence from mitochondrial DNA that head lice and body lice of humans (Phthiraptera: Pediculidae) are conspecific, J. Med. Entomol. 39 (2002) 662–666.
[26] R.D.M. Page, P.L. Lee, S.A. Becher, R. Griffiths, D.H. Clayton, A different tempo of mitochondrial DNA evolution in birds and their parasitic lice, Mol. Phylogenet. Evol. 9 (1998) 276–293.
[27] R.H. Cruickshank, K.P. Johnson, V.S. Smith, R.J. Adams, D.H. Clayton, R.D.M. Page, Phylogenetic analysis of partial sequences of elongation factor 1a identifies major groups of lice (Insecta: Phthiraptera), Mol. Phylogenet. Evol. 19 (2001) 202–215.
[28] R.D.M. Page, R. Cruickshank, K.P. Johnson, Louse (Insecta: Phthiraptera) mitochondrial 12S rRNA secondary structure is highly variable, Insect Mol. Biol. 11 (2002) 361–369.
[29] K.P. Johnson, M.F. Whiting, Multiple genes and the monophyly of Ischnocera (Insecta: Phthiraptera), Mol. Phylogenet. Evol. 22 (2002) 101–110.
[30] N.P. Leo, S.C. Barker, Intragenomic variation in ITS2 rDNA in the louse of humans, *Pediculus humanus*: ITS2 is not a suitable marker for population studies in this species, Insect Mol. Biol. 11 (2002) 651–657.
[31] R. DeSalle, J. Gatesy, W. Wheeler, D. Grimaldi, DNA sequences from a fossil termite in Oligo-Miocene amber and their phylogenetic implications, Science 257 (1992) 1933–1936.
[32] B.N. Danforth, J.I. Shuqing, Elongation factor-1alpha occurs as two copies in bees: implications for phylogenetic analysis of EF-1 alpha sequences in insects, Mol. Biol. Evol. 15 (1998) 225–235.
[33] C. Simon, F. Frati, A. Beckenbach, B. Crespi, H. Liu, P. Flook, Evolution, weighting and phylogenetic utility of mitochondrial gene sequences and a compilation of conserved polymerase chain reaction primers, Ann. Entomol. Soc. Am. 87 (1994) 651–701.
[34] J.D. Thompson, D.G. Higgins, T.J. Gibson, CLUSTAL W: improving the sensitivity of progressive multiple sequence alignment through sequence weighting, position-specific gap penalties and weight matrix choice, Nucleic Acids Res. 22 (1994) 4673–4680.
[35] J. Felsenstein, PHYLIP-Phylogeny Inference Package (version 3.2), Cladistics 5 (1989) 164–166.
[36] M. Kimura, A simple method for estimating evolutionary rate of base substitutions through comparative studies of nucleotide sequences, J. Mol. Evol. 16 (1980) 111–120.
[37] N. Saitou, M. Nei, The neighbor-joining method: a new method for reconstructing phylogenetic trees, Mol. Biol. Evol. 4 (1987) 406–425.
[38] J.K. Brown, Bootstrap hypothesis tests for evolutionary trees and other dendrograms, Proc. Natl Acad. Sci. USA 91 (1994) 12293–12297.
[39] B. Efron, E. Halloran, S. Holmes, Bootstrap confidence levels for phylogenetic trees, Proc. Natl Acad. Sci. USA 93 (1996) 13429–13434.
[40] R.D.M. Page, TreeView: an application to display phylogenetic trees on personal computers, Comput. Appl. Biosci. 12 (1996) 357–358.
[41] I.V. Tarasevich, A.A. Zemskaya, V.V. Khudobin, Diagnostic of the species of lice belonging to the genus Pediculus, Medskaya Parasitol. 1 (1988) 48–52.
[42] K.C. Kim, H.W. Ludwig, The family classification of the Anoplura, Syst. Entomol. 3 (1978) 249–284.
[43] K.C. Kim, Evolutionary parallelism in *Anoplura* and eutherian mammals, in: M.W. Service (Ed.), Biosystematics of Haematophagous Insects, Clarendon Press, Oxford, 1988, pp. 91–114.
[44] A. de Queiroz, For consensus (sometimes), Syst. Biol. 42 (1993) 368–372.
[45] R.J. Mason-Gamer, E.A. Kellogg, Testing for phylogenetic conflict among molecular datasets in the Tribe Triticeae (Gramineae), Syst. Biol. 45 (1996) 524–545.
[46] P. Pamilo, M. Nei, Relationships between gene trees and species trees, Mol. Biol. Evol. 5 (1988) 568–583.
[47] J.B. Slowinski, R.D.M. Page, How should species phylogenies be inferred from sequence data?, Syst. Biol. 48 (1999) 814–825.
[48] K.R. Macaluso, D.E. Sonenshine, S.M. Ceraul, A.F. Azad, Rickettsial infection in *Dermacentor variabilis* (Acari: Ixodidae) inhibits transovarial transmission of a second rickettsia, J. Med. Entomol. 39 (2002) 809–813.