Bionomina, **29**: 1–73 (2022)
https://www.mapress.com/bn
Copyright © 2022 • Magnolia Press

Monograph

ISSN 1179-7649 (print edition)
BIONOMINA
ISSN 1179-7657 (online edition)

https://doi.org/10.11646/bionomina.29.1.1
http://zoobank.org/urn:lsid:zoobank.org:pub:E974E95E-7794-4C1E-A3DA-56E8412DB65D

BIONOMINA

29

Fahrenholz's rule is not a valid methodology for determining species limits in chewing lice (Psocodea, Phthiraptera)

Daniel R. Gustafsson[1*] & Tomas Najer[2]
[1]*Guangdong Key Laboratory of Animal Conservation and Resource Utilization, Guangdong Public Laboratory of Wild Animal Conservation and Utilization, Institute of Zoology, Guangdong Academy of Sciences, Guangzhou, China.*
kotatsu@fripost.org; https://orcid.org/0000-0001-8868-8310
[2]*Department of Veterinary Sciences, Faculty of Agrobiology, Food and Natural Resources, Czech University of Life Sciences, Kamycka 129, 165 00 Prague 6, Czechia.*
tomas.najer@gmail.com; https://orcid.org/0000-0003-4768-7906
**Corresponding author.*

Magnolia Press
Auckland, New Zealand

Daniel R. GUSTAFSSON & Tomas NAJER
Fahrenholz's rule is not a valid methodology for determining species limits in chewing lice (Psocodea, Phthiraptera)
(*Bionomina* 29)
73 pp.; 30 cm.
20 September 2022
ISBN 1-77688-590-9 (paperback)
ISBN 1-77688-591-6 (Online edition)

FIRST PUBLISHED IN 2022 BY
Magnolia Press
P.O. Box 41-383
Auckland 1346
New Zealand
e-mail: bionomina@mapress.com
https://www.mapress.com/bn

© 2022 Magnolia Press
All rights reserved.
No part of this publication may be reproduced, stored, transmitted or disseminated, in any form, or by any means, without prior written permission from the publisher, to whom all requests to reproduce copyright material should be directed in writing.
This authorization does not extend to any other kind of copying, by any means, in any form, and for any purpose other than private research use.

ISSN 1179-7649 (Print edition)
ISSN 1179-7657 (Online edition)

Contents

Abstract . . . 3
Keywords . . . 4
Introduction . . . 4
Methodological note . . . 5
Fahrenholz's rule . . . 5
Development of a methodology . . . 6
Tales of the flying Earth: Eichler's theories meet real birds and lice . . . 8
Hidden assumptions . . . 8
Straggling, contamination, misidentification . . . 8
Host switching and host generalists . . . 10
Asymmetrical evolution . . . 15
Louse adaptations . . . 16
Biogeography of lice . . . 19
Do parasitologists dream of host-specific sheep lice? Eichler and cybernetics . . . 20
Szidat's rule . . . 20
Eichler's rule . . . 22
Timmermann's rule . . . 23
Złotorzycka's and Dubinin's rules . . . 23
Macronectes ***rule*** . . . 24
Ass-Knorr's, Rubcov-Ass' and Samšiňák's rules . . . 25
Kéler's, Janiszewska's, Breev's, Dogiel's and Grunin's rules . . . 26
Cope's rule . . . 29
Summary of cybernetics . . . 29
The long shadow of Fahrenholz . . . 30
Reverse Fahrenholz . . . 30
Chewing lice and how to recognize them . . . 32
The size of lice . . . 34
Circularity and contradiction: flamingoes and their lice . . . 35
The strictness of strictness . . . 38
Flowers for Fahrenholz: present and future . . . 41
Echoes from the past: Mey (2020, 2021) . . . 41
Conclusions . . . 43
Acknowledgements . . . 44
References . . . 44
Appendix 1–8 . . . 61

Abstract

During the 20th century, the taxonomy and classification of chewing lice (**Psocodea**, **Phthiraptera**) was under the influence of Fahrenholz's rule, which states that louse and host phylogenies should mirror each other. Strict implementation of this rule lead to the description of countless taxa based on host associations, with little or no other distinguishing characteristics. Recent data from a multitude of sources indicate that the underlying assumptions of this theory are flawed and that this methodology is therefore not consistent with best practices in louse taxonomy, identification and classification. Here, we summarize the historical development of Fahrenholz's rule and associated parasitophyletic rules, the evidence for and against these rules, and the pervasiveness of these rules throughout the 20th century. We conclude that the evidence against Fahrenholz's rule is so overwhelming, that it cannot be recommended as a basis for future investigations, except as a null hypothesis to be tested. Cases where Fahrenholz's rule applies may exist, but we recommend that each case is examined on its own merits, based on data derived from the lice themselves, and not from preconceived ideas of host specificity or strict adherence to co-speciation between lice and their hosts.

Keywords

Fahrenholz's rule, taxonomy, **PHTHIRAPTERA**, **ISCHNOCERA**, **AMBLYCERA**, chewing lice, species limits, species concepts, coevolution, host switching.

Taxonomy is a fool's game, and the fools are winning!
Theresa Clay, quoted in Zhang (2010)

We do, after all, propose to deal with organisms, not definitions.
Harrison (1916)

Introduction

Species identification of chewing lice (**PHTHIRAPTERA**) is rarely easy. This is partially due to the morphology of the lice themselves, which may be conserved within a genus, even if genetic differences are substantial. For instance, some species of *Lunaceps* Clay & Meinertzhagen, 1939, are best separated morphologically by the shape of the reentrant heads of a single abdominal segment, but are well separated genetically (Gustafsson & Olsson 2012*a*–*b*). In other cases, considerable morphological variation occurs within a species (e.g., Price 1975), but genetic data appear to support its monophyly (Martinů *et al*. 2015). Host specialization often differs among congeneric louse species (Martinů *et al*. 2015; Bush *et al*. 2016), meaning that each case must be evaluated on its own terms. There are only a few general trends throughout the whole of **PHTHIRAPTERA**.

Added to this is the multitude of poor descriptions and illustrations of many species of lice. Many descriptions consist of the bare minimum information to make the name available, sometimes with reference to one poor photo in which no details can be seen, or to illustrations of minor details that purportedly separate this species from its closest relatives (e.g., Eichler & Złotorzycka 1963*a*; Balát 1981*a*; Fedorenko 1983). Almost invariably, these species cannot be identified without direct comparison with type material, which may be lost (Jałoszynski *et al*. 2014; Naz *et al*. 2020).

Moreover, when type specimens of poorly described species are compared to their descriptions, morphological details are often found to differ from those descriptions. For example, the descriptions of *Philopterus fortunatus* (Złotorzycka, 1964*a*) and *Philopterus rapax* (Złotorzycka, 1964*a*) do not contain illustrations, but general outlines were provided later by Złotorzycka & Lucińska (1976). The dorsal anterior head plates (DAP) of some type specimens are obscured (including that of the holotype of *P. fortunatus*) but, when visible, show high morphological variability. In fact, figures 95 and 99 in Złotorzycka & Lucińska (1976) are two DAP types which are more or less equally represented among both *P. fortunatus* and *P. rapax.* Since all these specimens are designated as type material, it is obvious that descriptions of these two species were based solely on host associations. Cases like these have necessitated extensive revisionary work in recent decades (Palma & Price 2006; Gustafsson & Bush 2017; Gustafsson *et al*. 2019*a*; Najer *et al*. 2020*a*), often resulting in the synonymization of many taxa.

Many of these poor descriptions find their roots in a theoretical framework for species delimitation, identification and evolution of parasites constructed and promulgated primarily by Wolfdietrich Eichler (1912–1994), one of the most important figures in 20th century louse research. This framework—here termed the 'Eichlerian methodology'—had an immense impact on louse taxonomy and systematics, as

well as the way louse researchers still think about the evolution and biology of lice. It is a framework that, in almost all aspects, is wrong.

Recently, Mey (2020) reviewed some species of the genus *Philopterus* Nitzsch, 1818. Most of Mey's publication is a disagreement with Najer *et al.* (2020*a*) over type specimens and taxonomy of certain species of lice, and the ethics of publishing. These disagreements are irrelevant to this discussion, and not treated further here. However, this publication also included a section headlined "Host specificity and taxonomic practice", an outline of how species limits should be determined in the **Phthiraptera**. This outline is largely a modernization of the Eichlerian methodology, which has brought more disorder and disinformation into the field of louse systematics and research than any other set of principles. Moreover, over the last few decades, these principles have largely been abandoned due to overwhelming molecular, ecological and morphological evidence against them.

As we vehemently disagree with the Eichlerian methodology, we take the opportunity to outline the theoretical basis of Fahrenholz's rule and the subsidiary methodologies and rules associated with it, as well as a summary of the evidence against these hypotheses. We hope this review will be enough to once and for all lay Fahrenholz's rule to rest and allow louse taxonomy to enter the 21st century unfettered by the flawed hypotheses of the past. As all louse taxonomists know, there are still too many species to be described and redescribed to continue to use the methodology of yesteryear.

Methodological note

The primary language of almost all Eichler's publications, and many of those of Złotorzycka and other authors cited here, is German. All translations used here used here are our own and shown within quotation marks. With few exceptions, these are necessarily paraphrases, as for instance the sentence structure differs between German and English. For this reason, we have given page references to all direct quotes from German sources, so that the reader can examine the original text to determine whether our interpretations are valid.

Fahrenholz's rule

As a rule, most phthirapteran lice are host-specific, sometimes down to host subspecies level (Price *et al.* 2003). Moreover, phthirapterans have no free-living dispersal stages or intermediary hosts, and transmission between hosts is largely limited to hosts in physical contact (with a few exceptions; see below). These observations have led some researchers to the conclusion that the evolutionary history of a group of lice is intimately connected to that of their hosts. The early history of the theories of coevolution and host switching has been discussed in detail elsewhere (Kéler, 1959; Klassen 1992; Choudhury *et al.* 2000) and will not be repeated here. However, in the 1930s and 1940s, Eichler started building on the idea of coevolution, and would eventually take this concept to extremes. The central tenets of Eichler's research, and the Eichlerian methodology, can be summed up as follows:

[1] The lice occurring on two closely related host species have an ancestor that itself occurred on the ancestor of the two host species (Eichler 1936, 1940, 1948*a*, 1963); when one host species evolves into two species, the louse species parasitizing this host will also evolve into two species.

[2] Over time, this means that the phylogenetic patterns of the hosts will be exactly mirrored by the phylogenetic patterns of the lice (Eichler 1942, 1948*a*–*b*).

[3] Therefore, determining phylogenetic patterns, identities and species limits of one group of organisms will automatically reveal those of the other (Eichler 1946, 1948*a*).

This set of principles is generally called Fahrenholz's rule, named after Heinrich Fahrenholz (1883–1945), an early explorer of ideas of coevolution (Fahrenholz 1913). Eichler (1948*a*) wrote the most accessible account of this rule to an English-speaking audience, summarizing it as: "[…] the natural classification of some groups of parasites corresponds with that of their hosts", "the ancestors of extant parasites must have been parasites of the ancestors of extant hosts, so that evolution of hosts and parasites have been in correspondence", and "we can draw conclusions from the determination and classification of the parasites as to the natural relationships of their hosts". The evidentiary basis of this rule was drawn from different parasite groups (e.g., Eichler 1948*a*), but the main focus of its application in Eichler's research was phthirapteran lice. For that reason, we will here focus entirely on lice, particularly the suborders **ISCHNOCERA** and **AMBLYCERA**.

Fahrenholz's rule, most commonly interpreted as "parasite phylogeny mirrors host phylogeny" (Kim 1988; Mey 1999), is well known to most louse researchers. Less well known is another guiding principle first published by Eichler (1940), which was used as an implied corollary to Fahrenholz's rule throughout much of the 20th century. This unnamed principle states that it is "methodologically more appropriate to say that 'we cannot yet tell two parasites from different hosts apart' than 'this parasite occurs on both these different hosts'" (Eichler 1940: 256). This was a powerful engine for drawing absolute species limits between any lice on different host species, and consequently to "scratch the *mihi* itch" (Evenhuis 2008).

Development of a methodology

Although early formulations of Fahrenholz's rule were relatively simple, the framework was not static. The theory gradually developed to encompass new ideas to justify itself. This is seen not least in the gradual development of the (sub)species concept within louse taxonomy.

Eichler (1951*a*: 76) suggested that as a "working hypothesis", populations of lice on different host species that only differ slightly in morphology, should be considered different subspecies. Eichler (1966) asserted that "we may assume" that louse populations on different host species are reproductively isolated "[even] if we have not yet proven that morphological differences exist". Eichler (1970*a*: 121) stated that "no characters that can differentiate every specimen of one subspecies from another subspecies are necessary to recognize a subspecies; combinations of characters that indicate a statistical differentiation of the populations or population groups suffice." Eichler (1970*a*: 130), considered it better to give a new name to a population of lice on a novel host based on a single specimen than to assume that it is a known louse species from another host and thus "smuggle a host association likely to be wrong into the literature".

Eichler (1980*a*) built further on this, by connecting his methodology to the theory of sibling species. Host specificity among parasites, in his view, is comparable to ecological differentiation among free-living organisms. Just as free-living organisms may be more or less indistinguishable morphologically, but have different ecologies, parasitic organisms may also look the same, but diverge in other characters than morphology (e.g., biology, ecology, ethology). He continued (Eichler 1980*a*: 412) that we should place "the greatest emphasis" on host associations, as these are "isolation factors" comparable to the geographical isolation of free-living organisms.

The term "hospitosubspecies" was sometimes used for taxa defined by host associations, whether they had morphological differences or not. The origin of this term is unclear. Eichler (1990: 25) gave a reference to Eichler (1980*b*) for this term, but it was used already by Eichler (1968). By the 1980s, the term was a standard part of the Eichlerian vocabulary, but had not gained much of a foothold in the English-speaking world, for which Eichler (1980*b*) criticized Theresa Clay (1911–1995).

The idea that differences would be found if only specimens were studied carefully enough was doubtless fueled by the observation that several species supposed occur on several host species turned

out to be composite on closer observation. That is, in many cases Eichler's maxim was true. For instance, Hopkins (1939) mentioned "*Philopterus subflavescens*", a *nomen nudum* that has been reported from several dozen host species (Peters 1928; Geist 1931; Uchida 1948; Blagoveshtchensky 1951) from across the world. Similarly, Gustafsson & Bush (2021) counted at least 50 reported hosts of *Nirmus vulgatus* (Kellogg, 1896). In both these cases, subsequent studies have found that the louse populations on different host species often comprise different species (but see Gustafsson & Bush 2021).

At the genus level, Złotorzycka (1964*b*) proposed to establish new genera whenever "distinct new characters of taxonomic value that are absent in the *species typica*" were found in a species, but only if the hosts "can be divided into similarly differentiated groups". She (Złotorzycka 1967: 776) further introduced the idea that subgenera could be erected for groups that were believed to be genera "*in statu nascendi*", but which are not yet strongly differentiated morphologically. That is, taxa can be named not only if they are distinct biological entities, but even if it is believed that they will be distinct biological entities at some point in the future. Eichler (1972: 514) considered it "expedient" to divide genera of lice from different host groups into subgenera in cases where the morphological differentiation is not so large. Eichler (1952*a*: 570) called it "necessary" to do so.

The idea that congeneric species of lice cannot occur on the same host (Eichler 1979) sometimes seems to have been the primary impetus for erecting new genera or subgenera (Eichler 1971; Złotorzycka 1970), because the morphological characters given as justification would not be sufficient on their own. The recent discovery of three congeneric louse species on the same host puts this methodology into perspective (Gustafsson & Zou 2020*a*)—would these have been divided into three different genera or subgenera, if discovered by Eichler or Złotorzycka? The treatment of *Myrsidea*-complex lice on corvid hosts by Złotorzycka (1973) suggests that the answer would have been 'yes'.

Eichler & Złotorzycka (1971: 30–31) formulated their theories into a set of principles, which served as a manifesto for the Eichlerian methodology. The first principle states that "host records [of a louse species] from hosts other than the type host are as a rule either stragglers or other species". The sixth principle states that "morphologically separable groups of species with a clearly defined distribution [*i.e., host associations*] should be considered as different genera, even in those cases where the borders towards neighboring genera are not sharp".

The final pieces of the Eichlerian methodology were formulated by Eichler & Vasjukova (1980: 361). In their revision of *Anaticola*, they stated first that they had "mentioned but ignored" taxa that were described from stragglers to non-anseriform hosts, and then that it can be assumed that all records from anseriform hosts are from the correct host species. They pointed out that ducks are sociable birds and that hybrids are common but considered the possibility that *Anaticola* lice occur on the wrong anseriform host "theoretical". Deciding not to compare new species with known congeneric species, combined with the *a priori* assumptions that all host records in the correct host group are correct and that host specificity is strictly followed, finalized the methodology in which host associations are the deciding criteria for erecting new louse species.

At this stage, what started as an earnest attempt to use louse morphology and distribution as an aid to solving ornithological conundrums (see below) had become a mechanism for using the classification of the hosts to determine the classification of the lice. The latter is to be a perfect mirror image of the former, through divisions of genera and species of lice along the generic and specific lines of the hosts, based on the smallest of morphological characters—or even in the complete absence of such characters. Inconvenient host records can be ignored without deeper scrutiny, and new species can be described based on assumptions of host relationships (see below) to bolster Fahrenholz's rule. This is the Eichlerian methodology, in which classification of chewing lice became almost completely independent of data derived from the lice themselves, and instead became an extension of host classification and the playground of dogma.

Tales of the flying Earth: Eichler's theories meet real birds and lice

The last few decades have seen enormous developments in our understanding of parasitic lice, in terms of ecology, evolution and classification. Sometimes, studies have been performed to specifically test either Fahrenholz's rule, the Eichlerian methodology, or specific examples discussed by Eichler and his co-authors (e.g., Johnson *et al*. 2006; Gustafsson & Olsson 2017). More often, the influence of Eichler has been more indirect, and the challenges to his methodology and heritage have not been explicitly stated.

Here, we try to tie together data from behavioral, ecological, taxonomic, phylogenetic and other studies on chewing lice to put them into an Eichlerian context. Since the death of Eichler in 1994, both the quality and the quantity of data available for testing older hypotheses have developed rapidly, and ideas that could not be tested by Eichler and his contemporaries can now be tested, often with methods inconceivable 50 years ago. Overall, these data show that none of the assumptions of the Eichlerian methodology are as universal as he proclaimed them to be. Consequently, Fahrenholz's rule and the Eichlerian methodology as a whole are also not as applicable as Eichler assumed.

We acknowledge that most louse species are host-specific and that coevolution between lice and their hosts has undoubtedly happened. However, the exceptions are numerous, and each case must be evaluated on its own merits. Fahrenholz's rule, and the implication that differences in host associations necessarily imply differences in taxon limits of their lice, is invalid as a rule, but valid as a null hypothesis to be tested by data derived from the lice themselves. As such, it cannot be assumed to be true in all cases, even within the framework of a single louse genus, as congeneric lice may differ in their host specificity (see below).

Hidden assumptions

Fahrenholz's rule and the Eichlerian methodology contain many hidden assumptions, some of which make testable predictions. For instance, as pointed out by Lyal (1986), for a strict application of Fahrenholz's rule to be true, "no speciation of one partner can take place without speciation of the other". Thus, evolution needs to be symmetrical. This is also predicted by some other parasitophyletic rules (see below). Timm (1983) noted that Fahrenholz's rule implies that "there is no gene flow of parasites between different hosts", meaning that host switching has to either be impossible, or have negligible impact on host associations and louse evolution. If Fahrenholz's rule is applied strictly, this means no lice can be natural host generalists. As one implication, and common use, of the Eichlerian methodology is that host identity will reveal the identity of the louse, straggling, contamination and host misidentification must either be ignored or be instantly recognizable as such. Similarly, the louse fauna of a given host species must be homogenous over the range of the host taxon. All these assumptions are subject to challenge by more recent data.

Straggling, contamination, misidentification

The Eichlerian methodology does not work unless it is assumed that all reported host associations are correct and natural. If taxon limits among the hosts are used to predict taxon limits among the lice, incorrect host data will give incorrect louse data; the reverse is also true. In some cases, these errors may be easy to recognize, and the incorrect data may be ignored. For instance, a single pigeon louse in a sample from nuthatches should arouse suspicion. The natural occurrence of this species on nuthatches would then need to be confirmed by further sampling, to exclude the possibility of natural host switching (see below).

However, this kind of error may be harder to detect in cases where lice of a given genus would be expected from a host. For instance, the genus *Brueelia* Kéler, 1936 is widely distributed on Holarctic passeriforms, and lice in this genus would be expected to occur on most hosts in this group. When Balát (1982) discovered *Brueelia* on *Parus major* Linnaeus, 1758, there was no cause for suspicion, and he described *Brueelia weberi* Balát, 1982. However, Gustafsson *et al*. (2019*a*) re-examined the type specimens of *B. weberi* and specimens of *Brueelia conocephala* (Blagoveshtchensky, 1940) from a different host species and found them to be conspecific. The specimens from *P. major* may be stragglers, or *B. conocephala* may naturally occur on both hosts, but establishing the natural host range of this species may require larger sample sizes than are often available.

Especially in older collections, the problem of straggling or contaminations may be considerable. Palma (1994) discussed the circumstances surrounding the lice described by Kellogg & Kuwana (1902), which included an extraordinary amount of unusual host-louse associations, due to flawed collection methods. Dalgleish (1972) mentioned that of the 496 species described by Edouard Piaget (1817–1910), 96 were listed as from erroneous hosts by Hopkins & Clay (1954; in error, likely 1952). Similar aberrant records are common in the older literature, particularly when lice are derived from museum skins or zoological gardens, rather than directly from wild live hosts. Gustafsson & Bush (2017) listed some further examples, including swallow lice purportedly collected from a sandpiper, crow lice from a hornbill, starling lice from an oystercatcher, motmot lice from a woodpecker, and kingfisher lice from a monarch flycatcher. It is generally not easy to establish whether these erroneous host associations are due to straggling, contamination, host misidentification, wishful thinking or outright fraud.

It may be worth mentioning that many of the specimens of lice at the Natural History Museum, London, derive from the collections of Richard Meinertzhagen (1878–1967), who is now known to have perpetrated large-scale fraud with the bird skins from which some of his louse samples may have derived (Knox 1993; Rasmussen & Collar 1999; Rasmussen & Prŷs-Jones 2003; Rasmussen 2005; Prŷs-Jones 2022). No systematic survey of the lice bearing Meinertzhagen labels and the validity of their stated host data has ever been performed, and the host associations of lice in this collection will have to be accepted at face value, unless there is evidence to the contrary. Other problems with collections of bird skins discussed by Rasmussen & Prŷs-Jones (2003) may also affect lice collected from the same skins.

The Eichlerian methodology not only assumes that these kinds of errors are negligible (e.g., Eichler 1970*a*), but it perpetuates them by assuming that host association is a valid route to delimiting and differentiating louse species. Many species descriptions published by adherents of Fahrenholz's rule are based mainly or entirely on host associations, and the assertion that a new species from a new host is "gut abgegrenzt" (well separated) or "deutlich unterschieden" (clearly distinct) from a known species by, e.g., the head shape, or genitalia, or some other character, which is then sketched in little detail. Poor descriptions and illustrations obscure morphological data that may make straggling or contamination obvious when the specimens are examined. Subsequent identification of these species is typically impossible without direct comparison with type specimens.

An early example of how erroneous conclusions can be drawn using the Eichlerian methodology can be found in Eichler (1959). Following a conference on the systematic position of the shoebill (*Balaeniceps rex* Gould, 1852), Eichler found a single male louse on a museum skin of this bird and published a rudimentary description and two partial illustrations of a new genus and species *Abumarkub koenigi* Eichler, 1959. This "unusual species" then formed the basis of a long argument on the phylogenetic position of the host, as suggested by the morphology of the louse.

Notwithstanding the poor description and illustrations of the louse given by Eichler (1959), Tandan & Hajela (1962) were able to identify it as *Neophilopterus platyclypeatus* (Piaget, 1871), a louse normally found on *Anastomus lamelligerus* Temminck, 1823, implying that the holotype of *A. koenigi*

was likely to be a contaminant or straggler. The impetus for the new genus *Abumarkub* was the prior knowledge that ornithologists thought the host was "aberrant", which was then confirmed by the description of an "aberrant" louse. This, in turn, was used to bolster the claim that the shoebill should be placed in its own suborder. This circularity is at the core of the Eichlerian methodology.

Similar examples of new genera being described from straggling lice are relatively common, for instance, *Eichlerinopon* Złotorzycka, 1964*b* (see Clay 1966), *Lycocoranirmus* Mey, 2017 (see Gustafsson *et al*. 2019*b*), *Plesionirmus* Mey, 2017 (see Gustafsson *et al.* 2019*b*). Złotorzycka (1964*b*) also used her description to draw conclusions about the relationships of hosts, but Mey (2017) did not. More examples like these can be found at the species level, but many are obscured by poor descriptions and illustrations.

Host switching and host generalists

Successful host switching of lice was long thought to be rare in nature (e.g., Hopkins 1942; Clay 1950*a*). Eichler (1940: 257) called the idea that lice could occasionally move from one host to another and then adapt to the new host "not only unnecessary, but absurd" as a model for disjunct louse distributions. Hopkins (1939) asserted that the lifespan of straggling lice would be very short, implying that host switching would be rare. Lyal (1986) listed several accepted cases of host switching ("secondary infestation") published during the 20th century and speculated that the assumption was that host switching should be easy to recognize (Mauersberger & Mey 1993). The paucity of easily recognized cases would thus have implied that host switching is rare.

However, movement of lice between different host species was not unknown. Hopkins (1939) discussed some possible routes and implications, and Eichler (1944*a*, 1963) discussed various methods by which lice may move between hosts, and some potential exceptions to Fahrenholz's rule. However, these exceptions were largely dismissed: "We know of no confirmed cases in which the same species of louse routinely occurs on different host species, let alone on different host genera" and "the occurrence of the same form of parasite on different host species can only be accepted as a hypothesis when a large material has been collected from [free-ranging hosts] within the framework of a comprehensive study of the parasites of this whole host group" (Eichler 1940: 256).

The importance of host switching for the development of host associations in chewing lice has been reevaluated in recent decades as new data derived from new techniques have become available. Moreover, the existence of host generalists and lice naturally occurring on multiple hosts has been confirmed, primarily by genetic studies (e.g., Johnson *et al.* 2002*a*, 2011; Gustafsson & Olsson 2012, 2017; Grossi *et al.* 2014; Catanach & Johnson 2015; Martinů *et al*. 2015; Bush *et al.* 2016; Escalante *et al.* 2016; Catanach *et al*. 2017; Najer *et al*. 2020b; Tian *et al*. 2022), but also through detailed morphological work (e.g., Sychra *et al.* 2014*a*; Gustafsson & Bush 2017; Gustafsson *et al*. 2018*a*). Lice naturally occurring on multiple host species span almost the entire diversity of avian lice, including lice from both suborders and from most large groups of genera, as well as all ecomorphs.

Moreover, recent data suggest that the distribution of closely related lice on distantly related hosts is the result of extensive host switching (e.g., Gustafsson & Bush 2017; Sweet *et al.* 2018; Moya *et al.* 2019). Evidence of successful host switches may be found at many levels: congeneric lice on different host orders in *Goniodidae* (Johnson *et al*. 2011), the *Degeeriella*-complex (Catanach & Johnson 2015) and *Guimaraesiella* (Bush *et al*. 2016); conspecific lice on hosts of different families in for instance the genera *Myrsidea* and *Brueelia* (Sychra *et al*. 2014*a*; Gustafsson *et al*. 2019*a*). Mizukoshi *et al.* (2012) suggested that host switches between more distantly related hosts may even be true at the louse and host population levels. However, Koop *et al.* (2014) found high degrees of co-divergence in a similar insular system. Examples such as these illustrate that host switching is an ongoing process that has been relatively common throughout the evolution of parasitic lice.

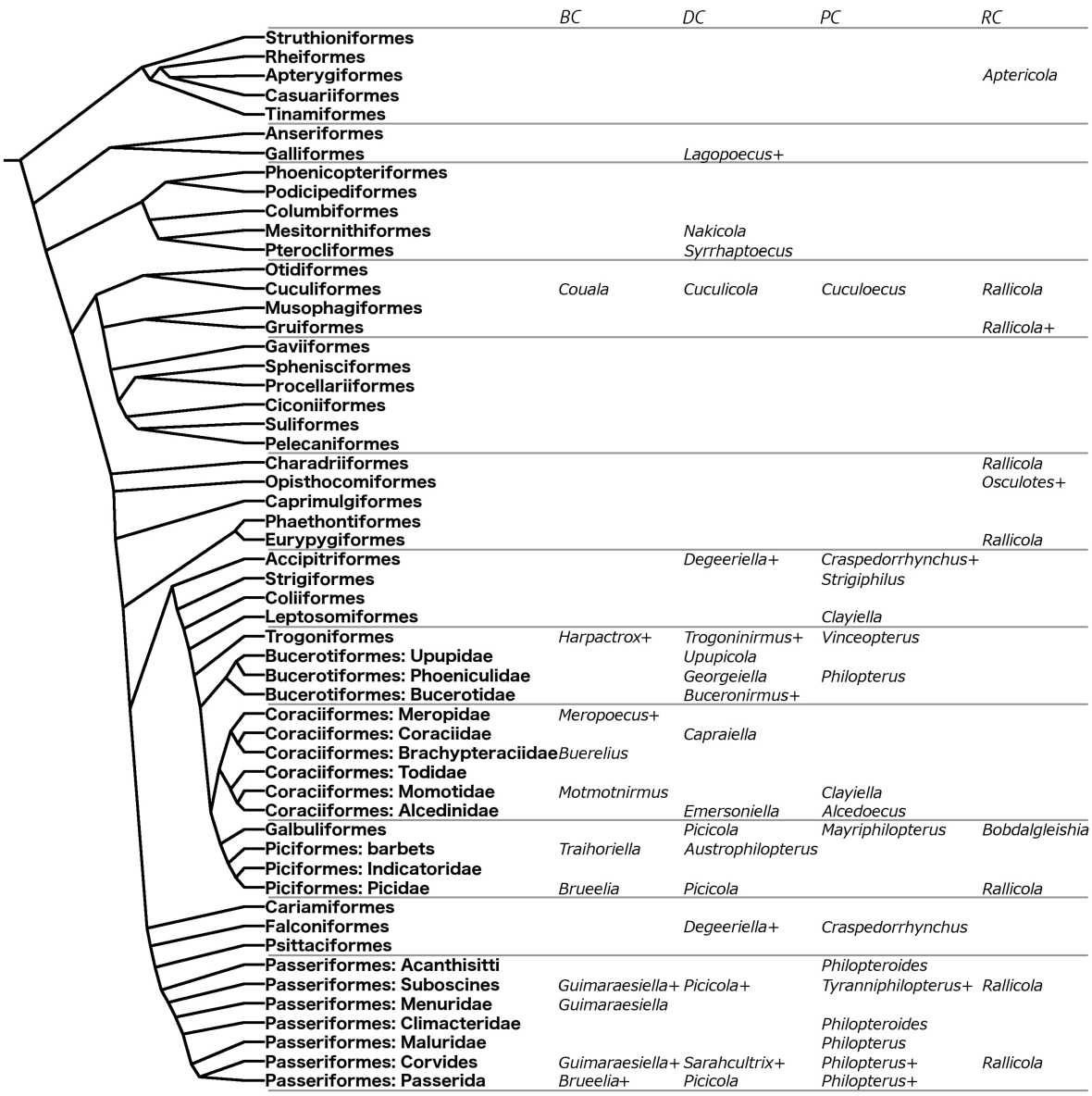

FIGURE 1. Distribution of four wide-ranging ischnoceran complexes of lice on different host orders. From left to right: *Brueelia*-complex (BC), *Degeeriella*-complex (DC), *Philopterus*-complex (PC) and *Rallicola*-complex (RC). Relationships between host groups follow Reddy *et al*. (2017), but branch lengths are not reproduced. Host groups below order level are only given in cases where more resolution is needed. In two cases, host groups are simplified to save space: [1] the group 'Bucerotiformes: Bucerotidae' also contains the *Bucorvidae*; [2] the clade 'Piciformes: barbets' contains the families *Capitonidae*, *Lybiidae*, *Megalaimidae* and *Ramphastidae*. Louse species known or suspected to be stragglers are not included here. The distribution of *Philopterus*-complex lice follows Mey (2004) and Gustafsson *et al.* (2019*c*). Note that some associations listed by Mey (2004) appear to be based on species that have not yet been described. The distribution of the *Brueelia*-complex follows Gustafsson & Bush (2017), and the distribution of the *Rallicola*- and *Degeeriella*-complexes follows Price *et al.* (2003) and Gustafsson (2019). For each host group, only one louse genus (typically the most speciose) is listed, even if more than one genus is known. A plus sign (+) after a louse genus indicates that more than one genus of lice in this complex are known from this host group; see Appendix 2 for a list. Grey horizontal lines are for guidance only.

Cases where closely related hosts are parasitized by distantly related lice have been confirmed both morphologically (e.g., Gustafsson *et al*. 2018*b*) and genetically (e.g., Bush *et al*. 2016). In particular, sympatric hosts that may be in regular contact with each other may share the same louse species. Lice collected on domestic birds also often include louse species not encountered on the wild ancestors of these birds (Emerson 1956; Emerson & Elbel 1957) but found on other domestic birds kept in mixed flocks in captivity (e.g., Fabiyi 1996; Fabiyi *et al*. 2017; Gustafsson & Zou 2020*b*). In some of these cases, genetically similar lice live on distantly related hosts sampled at very different geographical localities. For instance, conspecific samples of *Guimaraesiella* Eichler, 1949, sampled by Bush *et al.* (2016: fig. 3a, top clade) span the entire Old World tropics from Australia through China and the Philippines to Malawi. Samples of *Menacanthus eurysternus* (Burmeister, 1838) studied by Martinů *et al.* (2015) included specimens from across Eurasia and Africa, and into Central and South America. In both these cases, no one host species occurs throughout the range of the louse species.

Moreover, formal studies of co-phylogenetic relationships between lice and their hosts virtually never result in complete congruence of their phylogenies, as would be predicted by Fahrenholz's rule. Instead, most of these analyses show a mixture of co-speciation and host switching events. These mixed patterns have been found regardless of what group of lice was examined: **AMBLYCERA** (Martinů *et al.* 2015; Catanach *et al*. 2017), **ANOPLURA** (Light & Hafner 2008; Smith *et al.* 2008; Leonardi *et al*. 2019), **ISCHNOCERA** (Hughes *et al.* 2007; Sweet & Johnson 2016; Sweet *et al.* 2016, 2017*a*; Catanach *et al*. 2019; Moya *et al.* 2019) and **TRICHODECTOCERA** (Light & Hafner 2007; Popinga *et al*. 2019). The few known rhynchophthirinan lice have been collected from two distantly related orders of mammals (Price *et al*. 2003).

The fact that different genera of lice parasitizing the same host group may be closely related to different groups of lice on other host groups (Fig. 1) is another argument against the validity of Fahrenholz's rule and the Eichlerian methodology. For instance, trogons are parasitized by louse genera from both the *Degeeriella*-complex (suggesting a relationship with woodpeckers, raptors, etc.) and lice in the *Brueelia*-complex (suggesting a relationship with songbirds) (Gustafsson *et al*. 2019*c*). Also, species of head lice of the *Philopterus*-complex from trogons are morphologically most similar to lice found mainly on coraciiform and galbuliform hosts. Arguing that the last common ancestor of all the lice in these three complexes lived on the last common ancestor of all the hosts has next to no explanatory value, and would require a detailed scenario of selective extinction (see Eichler 1952*a* for arguments that this may be the case), as well as a much richer louse fauna on virtually all bird groups, only a few million years ago, than is found on any bird species today. Data supporting Eichler's (1952) scenario are not available, and are likely non-existent. Explicit comparisons of different louse genera from the same host taxa consistently show different evolutionary patterns for different louse genera (e.g., Bueter *et al.* 2009; Gustafsson & Olsson 2012*a*, 2017; Yamagishi *et al.* 2014; Sweet *et al*. 2016).

Appendix 1 summarizes the known cases where one genus of lice occurs on more than one order of birds and the phylogenetic relationship of these bird orders (Reddy *et al*. 2017). Among the 23 ischnoceran and 12 amblyceran genera listed, only one (*Pectinopygus* Mjöberg, 1910) is found on host orders that are also sister groups. However, even in this case, *Pectinopygus* does not occur on all families in these two host orders, suggesting that either host switching, or selective extinction has been part of the evolutionary history of these host-louse associations. At the species level, coevolution between *Pectinopygus* and its hosts appears to have occurred in some, but not all cases (Hughes *et al*. 2007). In all the other cases shown in Appendix 1, either host switching or extensive and highly selective extinctions following the evolution of the modern louse genera would have to be assumed to correlate the host distribution of chewing lice with Fahrenholz's rule.

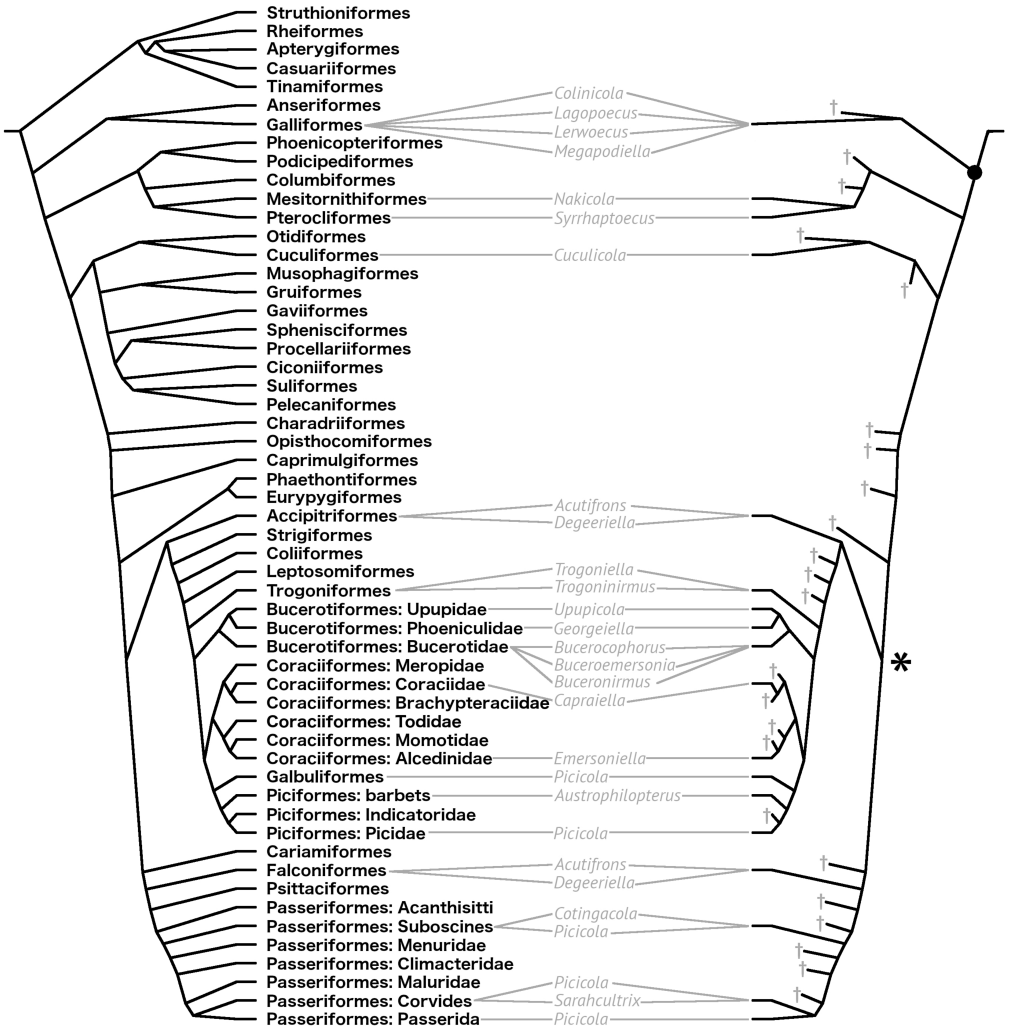

FIGURE 2. Overview of the degree of selective extinction and multiplicity of closely related louse genera occurring on the same host, using the *Degeeriella*-complex as an example. In this illustration, it is assumed that Fahrenholz's rule and the Eichlerian methodology are correct, and that host switching is therefore of no evolutionary importance. In this scenario, distribution patterns can only be explained by methods that do not take host switching into account, e.g., vicariance, duplication, extinction. The left-hand tree shows the relationships of the hosts, following Reddy *et al*. (2017; with the same caveats as in Figure 1); the right-hand tree is based on the same source, but modified to show the distribution of the *Degeeriella*-complex, following Price *et al.* (2003) and Gustafsson (2019). The last common ancestor of all *Degeeriella*-complex lice is denoted by a black circle. Crosses (†) denote branches in the host tree from which no members of the *Degeeriella*-complex are known. These absences could be due to several causes, including extinction, 'missing the boat' events, or insufficient sampling of the relevant hosts. The asterisk (*) denotes a particularly important host ancestor. In order for all currently recognized louse genera to be monophyletic in the absence of host switching, this ancestor would need to be parasitized by a total of five different groups within the ancestral *Degeeriella*-complex: *Acutifrons*, *Degeeriella*, *Picicola*, the ancestor of [*Cotingacola* + *Sarahcultrix*], and the ancestor of [*Austrophilopterus* + *Bucerocophorus* + *Buceroemersonia* + *Buceronirmus* + *Capraiella* + *Emersoniella* + *Georgeiella* +*Trogoniella* + *Trogoninirmus* + *Upupicola*]. Using the distributions of lice in Figure 1 and Appendix 2, this ancestral population would also need to be parasitized by at least two groups within the *Brueelia*-complex, three groups within the *Philopterus*-complex, and two groups within the *Rallicola*-complex. Only within these four complexes, 14 groups of lice would thus need to parasitize this ancestral host. In addition, amblyceran lice and lice not belonging to these four ischnoceran complexes may need to have occurred on this ancestor. In contrast, most modern birds are parasitized by 3–5 different species of lice, and birds with more than 10 louse species are known only in the **Galliformes** and **Tinamiformes**.

Figure 2 shows a scenario where host switching has no evolutionary importance, and all distribution patterns of lice on birds follows Fahrenholz's rule and the Eichlerian methodology. Details of the distribution of lice in the *Degeeriella*-complex [following Price *et al.* (2003) and Gustafsson (2019)] are displayed on a host tree derived from Reddy *et al*. (2017). The right-hand tree has been pruned to remove all branches in the host tree from which no members of the *Degeeriella*-complex are known. These are marked with crosses (†), implying evolutionary events that are necessary to explain the current distribution, in the absence of host switching. The exact events are of course unknown, but include extinction of lice on a host group, 'missing the boat' events when a host population radiates into two, and likely some cases of inadequate sampling effort.

Most notable in Figure 2 is the ancestral host marked with an asterisk (*). If the currently recognized louse genera are assumed to be monophyletic, and in the absence of host switching, this ancestor would have been parasitized by a minimum of four different groups within the ancestral *Degeeriella*-complex: *Acutifrons*, *Degeeriella*, *Picicola*, and the common ancestor of all the other genera. If any of the three first genera are nested inside the last group, as suggested by Catanach & Johnson (2015), the number of louse groups of the *Degeeriella*-complex present on this ancestral host would necessarily increase.

Furthermore, using the distributions of lice in Figure 1 and Appendix 2, this ancestral host population would also have been parasitized by at least two groups within the *Brueelia*-complex, three groups within the *Philopterus*-complex, and two groups within the *Rallicola*-complex. Thus, considering only these four complexes, 11 groups of lice would have parasitized this ancestral host and would have had to survive on both descendant branches. This scenario deals only with four ischnoceran complexes, and additional ischnoceran complexes as well as the entirety of the **AMBLYCERA** would need to be added to this ancestral bird. In contrast, most modern birds are parasitized by 3–5 different species of lice, and those with more than 7 louse species are rare outside the **GALLIFORMES** and **TINAMIFORMES** (Price *et al*. 2003).

Some problems arising from this kind of methodology can be explained by flawed taxonomy. For instance, Catanach & Johnson (2015) indicated that *Degeeriella* may need to be split into two genera, for which there is morphological support. In other cases, such as the *Brueelia* on woodpeckers, no morphological support can be found for such splits (DRG, unpublished data), and either host switching or complicated scenarios of extinctions are necessary to explain the current louse distribution.

The mechanisms of host switching have been more thoroughly investigated in recent decades. Early *in vitro* experiments showed that some lice can survive many days without a host (Rem & Złotorzycka 1981; Mey 1998*a*) and even be kept alive for generations in the complete absence of hosts (Nelson 1971; Saxena & Agarwal 1983). Experimental transfers have shown that lice can easily survive on new hosts, provided the size difference between the hosts is not too large (Bush & Clayton 2006; see below). In mammal lice, transfer experiments were successful among closely related hosts, but the success rate decreased with phylogenetic distance (Reed & Hafner 1997). The supposition of Hopkins (1939) that lice that move from one host to another cannot survive very long thus seems to be falsified by direct experiments.

Behavioral flexibility may be important in determining the success of host switching (Bush 2009). Pigeon wing lice may switch their microhabitat depending on what host species they are on, whereas pigeon body lice do not. As these two louse groups are also known to compete for different resources (Bush & Malenke 2008), behavioral differences may over time lead to the evolution of different ecomorphs among closely related lice (e.g., the near-head-louse species of *Columbicola* Ewing, 1929; Adams *et al*. 2005). In contrast, the host may have few options to get rid of novel lice. Naïve hosts experimentally infested with lice may change the amount of time spent preening (Villa *et al*. 2016), but we know of no example where a host has changed its method of preening due to the introduction of a new louse type.

Detailed studies of phoresy on hippoboscid flies have thrown more light on one of the mechanisms that may make host switching common among some groups of lice (Whiteman *et al.* 2004; Harbison *et al*. 2008, 2009; Bartlow *et al.* 2016; DiBlasi *et al*. 2018; Lee *et al*. 2022). However, not all lice are phoretic (Bartlow *et al*. 2016). Even in the absence of phoresy, multiple mechanisms have been suggested that may give rise to opportunities for host switching, including: sequentially shared nest holes (Harrison 1915*a*; Eveleigh & Threlfall 1976; Clayton 1990; Johnson *et al*. 2002*b*; Weckstein 2004), communal dust or sand baths (Hoyle 1938; Dubinin 1948; Hopkins 1949*a*; Johnson & Clayton [*in* Price *et al*.] 2003), host kleptoparasitism (Hopkins 1942), host courtship feeding (Lindholm *et al.* 1998), host groupings at caterpillar outbreaks (Brooke & Nakamura 1998), shared nesting islands (Banks *et al*. 2006), straggling from prey to predator (e.g., Whiteman *et al*. 2004), walking on tree trunks or walls from host to host (Dubinin 1948; Ryder 1967), communal roosts (Gustafsson & Olsson 2012*a*, 2017), host participation in mixed species feeding flocks (Gustafsson *et al.* 2018*a*), theft of nest material (Price *et al.* 2003), floating feathers in the water (Dubinin 1948), and host-nest parasitism (Hahn *et al*. 2000). Hybridization of hosts may also be a valid route for lice to spread from one host species to another (Bulgarella *et al.* 2018). Depending on the biology of the host, there is no reason to assume that opportunities for host switching are rare in nature. In any case, these observations seriously undermine the assumption that congruent host and louse phylogenies are the norm.

Asymmetrical evolution

The assumption that host switching is rare also raised the problem of how to explain the presence of morphologically similar lice on distantly related hosts. The usual explanation was to assume that ancestral lice had been present on the ancestor of all hosts, and that it remained on all or most of its descendants, in line with Fahrenholz's rule (Eichler 1936, 1940, 1948*a*, 1963). For instance, Clay (1949, 1953, 1958) used this argument to explain the distribution of "less specialized" lice, the genus *Rallicola* Johnston & Harrison, 1911, and the *Degeeriella*-complex, respectively. Moreover, Clay (1949, 1958) suggested that the lack of great morphological differences among louse taxa from different host groups may in some cases be the result of parallel or convergent evolution.

Some authors (e.g., Hopkins 1939; Złotorzycka 1968*a*; Clay 1974*a*) speculated that louse evolution lagged behind host evolution, possibly because the conditions on the feathers are comparatively constant, and do not require much evolutionary change over millions of years (see Rubcov-Ass's rule, below). Clay (1946) suggested that some groups of lice may be more 'stable' than others, and that some louse genera may possibly be found throughout all birds except where "they have become extinct, having remained relatively unchanged in comparison with the evolution of their hosts" (see also Eichler 1952a). Eichler (1963: 211) suggested that lice could "easily await the continued evolution of the hosts, and then react to this changed environment in their own way".

However, already Kéler (1959: 390) had argued against the above arguments, stating that this theory "emerged from the erroneous assumption that the life of mallophagans in the plumage of the feathers is more monotonous and less varied than that of the birds". Kéler (1957, 1959) argued that the higher temperature that surrounds lice under the plumage or pelage of the host would speed up the mutation rate in lice. Whether or not the temperature is involved, comparisons of mitochondrial and nuclear substitution rates in lice suggest that the rate of evolution in lice may be much higher than for other organisms, not slower (Johnson *et al*. 2005*a*).

Experimental transfer experiments have also shown that lice from a common source placed on differently sized hosts may evolve at least rudimentary reproductive isolation within ~ 60 louse generations (~ 4 years; Villa *et al*. 2019). While short-term reproductive isolation does not necessarily lead to speciation, the fact that isolation developed on lice without a change of generation in their hosts,

strongly implies that the evolutionary rate of lice in general is much higher than that of their hosts. Similarly, ~ 60 louse generations were sufficient to evolve significant colour differences in chewing lice from a common source transferred to birds of different colour (Bush *et al*. 2019), suggesting that some morphological characters may change in an evolutionary blink of an eye. As such, the minute differences in morphology that Eichler indicated we should be looking for may not be taxonomically or evolutionarily relevant.

A likely scenario is that the evolution of lice and their hosts is probably asymmetrical, with lice evolving faster than their hosts. The reverse—cases where hosts evolve faster than their lice and the ancestral louse species parasitizes a number of closely related hosts due to failure of speciation—may not be practically distinguishable from cases where a louse capable of dispersing among various hosts becomes a host generalist. For instance, the occurrence of *Brueelia vulgata* on several closely related hosts in the genera *Junco* Wagler, 1831 and *Zonotrichia* Swainson, 1832, has been confirmed both genetically (Bush *et al.* 2016) and morphologically (Gustafsson & Bush 2021). Is this host distribution the result of 'lagging' louse evolution, or of repeated host switching between sympatric host species that may co-occur in mixed-species flocks?

Perhaps an unorthodox partial answer to this question was provided by Block *et al*. (2015). In their host-parasite system, the host lineage diversified into different, isolated populations, which led to the diversification of their populations of the genus *Myrsidea* Waterston, 1915. Later, the isolated host lineages appear to have 'despeciated' and merged together into a single lineage again. However, their species of *Myrsidea*, though morphologically very similar, still show a pattern of greater geographical isolation. This would indicate that the lice have not 'despeciated' even if their hosts have. Alternatively, the species of *Myrsidea* may have adapted to different environmental conditions in different areas, which may explain why they have failed to extend their ranges along with their hosts (see below). More data from similar situations are needed to confirm or discard these hypotheses. Clay (1949) considered such cases as a possible route towards the co-occurrence of two congeneric species of lice on the same host species.

In any case, host generalists and host specialists may be only different stages in the same evolutionary lineage, depending on external factors. Sweet *et al.* (2017b) suggested that population-level and phylogenetic relationships may be formed by different processes even within the same lineage of lice. Bush *et al.* (2016) suggested that phoresy may help *Brueelia*-complex lice to "escape and radiate" (Erlich & Raven 1964), which might account for their great variety and the co-occurrence of multiple louse genera within this complex on the same host species (Gustafsson & Bush 2017). The repeated recoveries in genetic studies of host generalist groups that are nested within more specialist groups may be evidence that such processes are ongoing (Martinů *et al.* 2015; Bush *et al*. 2016).

Eichler (1963) stated that the evolution of lice may be faster or slower than that of their hosts, or run in parallel (see also Kim 1988), evidently without realizing the impact this would have on his methodology. If the coevolutionary status of louse-host systems varies among such systems, geographic areas, or time periods, it is impossible to assert that all such systems should be approached by a unified method with the *a priori* assumption that host specificity is strictly followed. Instead, they have to be evaluated on a case-to-case basis.

Louse adaptations

The possible lack of "despeciation" described by Block *et al.* (2015) in the case of *Myrsidea* lice, and the speed with which lice adapt to their new hosts during artificial transfer experiments (Bush *et al.* 2019; Villa *et al.* 2019) raise questions about what exactly it is that lice adapt to on a host. Eichler (1970*b*: 136) suggested that lice "protect themselves from competition from other parasites through

their choice of micro-niche" [on the host]. However, data collected from the same host populations over almost 40 years show that one species of *Geomydoecus* Ewing, 1929 is capable not only of switching hosts, but even of outcompeting the congeneric louse species living on the novel host (Hafner *et al*. 2019). This suggests that host specialization may involve less host-specific adaptation than previously assumed. Alternatively, from the louse's point of view, the living conditions on closely related host species may not be all that different.

Chewing lice attach to their hosts using tarsal claws and mandibles, with mandibles at least in some cases being the most important (Reed *et al.* 2000; Bush *et al*. 2006*a*). While rostral grooves (feeding canals; clypeo-labral sutures) may be strongly correlated with host hair or feather size in some cases (Reed *et al*. 2000), Bush *et al.* (2006*a*) found no differences in attachment success between lice placed on feathers from natural and novel hosts. Therefore, data suggesting that attachment to the host is a significant factor in the evolution in host-louse specificity are ambiguous, not least because nymphs and adults often have significantly different measurements and morphologies (Mey 1994*a*), yet generally occur on the same feather regions (but see Agarwal 1967). For amblycerans and circumfasciate ischnocerans that do not have feeding canals, which do not attach to their hosts using the mandibles, this mechanism may be without importance.

Despite the occasional reports of mites, lice, other insects and other matter in the crop or stomach of lice (Waterston 1926; Oniki & Butler 1989; Mey 2017), the primary food of lice is derived from their hosts, principally feathers, skin, oils, hair and blood. Symbionts found in the gut of the lice have been suspected of being involved in extracting nutrients from their diet (Smith *et al*. 2013). At least in sucking lice, gut symbionts appear to be involved in supplying B vitamins (Boyd *et al*. 2016). Differences in the structure or composition of feathers, immunological agents in the blood, or other factors that directly interfere with feeding may thus form an important selection pressure for the adaptation of a single lineage of lice to a single lineage of birds, as predicted by Fahrenholz's rule. Conversely, if differences in these factors are small between two host species, this may not prevent the establishment of a louse on a novel host.

Data on the ability of lice to feed on different host species are limited, but Clayton *et al.* (2003) found no differences between feather mass or survivability in *Columbicola columbae* (Linnaeus, 1758) fed with feathers from four different, but closely related, host species. Bush *et al*. (2006*b*) found no differences in the survivability of lice reared on feathers with different levels of melanin, indicating that feather structure may not be important for preventing host switching due to adaptations for feeding. The existence of host generalist feather eaters (see above) also indicates that potential differences in feather structure or composition may be overcome in at least some lineages of lice.

Møller & Rózsa (2005) found that the generic diversity of amblycerans, but not ischnocerans, increased with the strength of the host's T-cell mediated immune response. They suggested that "strong host immune responses select for specialization and hence diversification in Amblyceran lice", i.e., in lice that consume blood. Perhaps it is notable that *Colpocephalum* Nitzsch, 1818, a genus that includes species that do not consume blood (e.g., Nelson 1971), is also the most widely distributed of all amblyceran genera (Price *et al*. 2003: table 1), with many species occurring on multiple host species or even host orders (Price & Beer 1963*a*; Catanach *et al*. 2017). Insufficient data on the interaction between the host immune system and lice have been published (Owen *et al.* 2010), and the potential for differences in immune systems of different hosts to prevent host switching is unknown. For ischnocerans, which normally do not come into contact with the immune system, this effect is likely nonexistent.

More direct evidence is available in regard to host defenses that influence louse survival on a host, including both direct effects, such as preening, and indirect effects, such as body size. Clayton *et al*. (2010) and Bush & Clayton (2018) summarized the direct control of ectoparasites by birds. Bill overhang is necessary for successful preening control (Clayton *et al*. 2005), and bill overhang

and grooming behavior may vary among species in an area (Clayton & Cotgreave 1994; Clayton & Walther 2001), thus potentially influencing the abundance of lice on hosts. However, it is not clear whether these features are different enough, among closely related host species, to prevent host switching.

For instance, the repeated convergent evolution of the head louse ecomorph among distantly related groups of lice (Johnson *et al.* 2012) and the continued presence—often with high prevalence—of head lice on different bird groups may indicate that scratching is not particularly efficient in preventing the establishment of a louse species on a novel host. Goodman *et al*. (2020) suggested that scratching of the head may be mainly useful to flush lice onto the body, where they can be removed by normal preening. Direct, active defense behavior of the hosts may be too general to have any influence on host switching, unless a newly established louse species is markedly different from anything occurring naturally on the host. It is unlikely that the kind of damage done to a louse during preening would differ substantially between different louse groups (see Clayton *et al*. 2005).

Indirect bird defenses may be more important for this reason. For instance, Dumbacher (1999) showed that lice preferred to eat non-toxic feathers over toxic feathers from birds of the genus *Pitohui* Lesson, 1831. However, some lice occur naturally on *Pitohui* hosts, suggesting toleration of small amounts of this toxin (Dumbacher 1999; Gustafsson & Bush 2017). Similarly, secreted liquids in the plumages of auklets of the genus *Aethia* Merrem, 1788 may immobilize chewing lice (Douglas 2013), but apparently not kill them (Douglas *et al*. 2005). Preen oil may also be used to combat lice (Moyer *et al*. 2003) and as this oil may differ among host species (Haribal *et al*. 2005), this may prevent host switching. The size of the uropygial gland is positively correlated with the richness of amblyceran genera, but not with the that of ischnoceran genera (Møller *et al.* 2010), suggesting that preen oil may have different effects on different groups of lice. However, as the chemical composition of these oils differs across the year for the same host individual (e.g., Kolattukudy *et al.* 1987; Reneerkens *et al.* 2002; Haribal *et al*. 2011; Grieves *et al*. 2020), it is possible that lice are adapted to a variety of oil compositions, and, therefore, that host switching may not be limited by interspecific differences in preen oil.

The dimensions of lice generally follow Harrison's rule, which states that within a louse genus that "is well distributed over a considerable number of nearly related hosts, the size of the parasite is roughly proportional to the size of the host" (Harrison 1915*a*). This rule is generally supported by recent studies (Kirk 1991; Johnson *et al.* 2005*b*; Harnos *et al.* 2017). The principal mechanism preventing lice from larger hosts successfully establishing on smaller hosts is the size of the interbarb space on primary feathers (Bush & Clayton 2006), where some groups of lice hide to escape from being preened out (Bush *et al*. 2006*a*: fig. 4). Lice that do not hide in these spaces generally do not follow Harrison's rule (Johnson *et al*. 2005*b*; Harnos *et al*. 2017). Furthermore, some lice are also cryptically coloured to escape from being detected during preening (Bush *et al*. 2010). Sexual plumage dimorphism in the host is also correlated with cospeciation (Sweet *et al*. 2018), possibly indicating that distinct plumages may influence the success of host switching to that host. Plumage colouration may also influence host specificity in some shorebird lice (Gustafsson & Olsson 2017).

However, while host body size may influence louse host switching success (Tompkins & Clayton 1999; Bush & Clayton 2006), Sweet *et al.* (2018) did not find that congruence between host and louse phylogenies was affected by host body size. Since louse body size may evolve rapidly (Villa *et al*. 2019), it is possible that Harrison's rule is not always a restraint on host switching *per se*, but in many cases a result of evolution following host switching. Louse body size is related to fecundity (Villa *et al*. 2018), which would tend to select for larger body size among female lice switching to a larger host; males of at least some species would need to follow this size increase to be able to stay *in copula* with the female (Villa *et al*. 2019: fig. 3). Possibly, successful host switches from smaller to larger hosts are typically followed by a rapid evolution towards the largest possible body size that still allows the louse to remain protected from preening.

In summary, lice do adapt to their hosts, and some mechanisms likely influence whether or not a host switch will be successful. However, no mechanism is known that is general enough to limit or structure patterns of host switching across **Phthiraptera**. Immune system interactions may limit amblyceran lice, but not ischnoceran; preen oil differences may limit ischnocerans but not amblycerans; differences in interbarb space may have great effect on wing lice, but not on other ecomorphs. Hence, the possibility of successful host switching of any louse species between any two host species will have to be evaluated based on the relevant factors of the specific system.

Biogeography of lice

The assumption that louse identity can be established if the host identity is known presupposes that the same louse fauna is found throughout the geographical range of the host. In cases where more than one congeneric louse species occur allopatrically on a monotypic host species, identification based on host associations may be used to identify some lice obtained from this host correctly, but not all. Researchers who do not examine their specimens carefully, or who have access to material from only part of the host's range, may draw erroneous conclusions about louse biogeography and the coevolutionary history of the host-louse relationship. This problem is exacerbated by poor species descriptions that may not accurately reflect the necessary characters to distinguish the two allopatric louse species on the host (see below).

Cases where the louse fauna of a host differs depending on locality have long been known (e.g., Clay 1964, 1976*a*). For instance, the differences in the louse fauna of hyraxes in different localities were central to many early discussions about host specificity (e.g., Hopkins 1945, 1949*a*; Eichler, 1948*a–b*, 1952*b*; Kéler 1959). Thus, Fahrenholz's rule and the Eichlerian methodology were developed against a background knowledge which violated these rules. Such cases had surprisingly little impact, possibly as they were seen as rare exceptions that could easily be dismissed (see above).

In recent decades, more data have been published showing how different louse faunas in different parts of the host's range may emerge. Above all, the impact of ambient humidity has been supported for a range of louse genera (Fabiyi 1996; Carillo *et al.* 2007; Bush *et al*. 2009; Malenke *et al*. 2011; Barrientos *et al.* 2014; Takano *et al*. 2019; Gustafsson & Zou 2020*b*). The impact of host habitat size on parasite diversity has also been studied (Bush *et al*. 2013; Barrientos *et al.* 2014; Literak *et al*., 2015). Temperature (Grossi & Proctor 2021), changes in host range (Rózsa *et al*. 2015), changes in louse range (Galloway & Palma, 2008) and random founder effects (Paterson *et al*. 1999) may also influence whether a louse species occurs in a given part of the host's range. Notably, such factors, and the geographical distribution of lice across the range of a host, may be different for different louse species living on the same host (Toon & Hughes 2008).

Presumably, the absence of a louse species in parts of the host's range may act as an 'open niche', into which other lice, given the opportunity, could move without opposition (see Malenke *et al.* 2011). Few such cases have been demonstrated, but Timmermann (1971) reported one case with lapwings, and the distribution of lice on domestic chicken indicates that this may have happened on this host as well (Gustafsson & Zou 2020*b*). For most lice, the geographic resolution and the basis for identification of published records are too poor to establish whether lice in one part of the host's range are significantly different from those in other parts.

The existence of different congeneric lice in different parts of a host's range violates ***either*** the assumption that the speciation patterns of both taxa need to be symmetrical, ***or*** the assumption that host switching is of negligible importance. Relatively few such cases are known, partially due to the prevalent assumption during the 20th century that such cases should be exceptionally rare. Thus, published accounts and identified specimens in museum collections are often identified with reference

to host associations, under the assumption that the same louse species occurs throughout the range of the host. In cases where different louse species are known from different parts of the same host species' range, the hosts in different areas are typically at least subspecifically distinct (Edwards 1965; Gustafsson & Bush 2017; Gustafsson *et al*. 2018*a*, 2021*a*).

However, there are known cases where the host is monotypic and the lice are not. Clay (1964) showed that different populations of two species of boobies were parasitized by different, but shared, species of *Pectinopygus* in different oceans. Johnson *et al*. (2002*a*) found different species of *Columbicola* on the same subspecies of pigeon in different parts of its range. Toon & Hughes (2008) found that two species of lice were associated with different host subspecies in different ways, indicating that the lice in these cases were not associated with specific host subspecies, but possibly distributed according to either some common morphological feature that cuts across subspecies (e.g., dorsal plumage colour) or some environmental factors (e.g., humidity). Undescribed specimens of *Myrsidea* from South China suggest that in some cases, lice may be restricted to certain mountain ranges, even if the birds are not (DRG, unpublished data).

Overall, the factors that may influence the biogeography of lice are better known than the actual effects that such factors impose on the evolution and classification of lice. Presumably, as more data are analyzed and more specimens are examined without the bias of strict host specificity, more cases of limited range-species and allopatric distributions of congeneric lice on the same host species may be expected.

Do parasitologists dream of host-specific sheep lice? Eichler and cybernetics

Fahrenholz's rule was not the only rule thought to govern the evolution of louse diversity and host associations; the Eichlerian methodology had more tools in its toolkit than outlined above. Eichler (1970*b*) adopted the viewpoint of cybernetics (from κυβερνητικός, *kubernçtikós*, ancient Greek for 'good steersman') according to which (biological) systems are self-regulating and self-controlling, e.g., through feedback loops. References to cybernetics are common in Eichler's later publications, and seem to have provided a foundational framework within which the various rules had a natural place. For instance, Eichler (1970*b*: 134) wrote: "Parasitism is, in essence, a cybernetic system between host and parasite, through which the parasite constantly strengthens its bond to its host evolutionarily via a feedback loop from the host". Eichler (1976: 38) used the formula "dialectic indicator of evolution", which carries a similar idea.

The various rules of parasite evolution advocated by Eichler were often formalized versions of general statements by others, but some of them would gradually become integral to Eichler's vision of host-louse evolution. Here, we outline these rules as applied to lice; however, few of them have subsequently been tested using chewing lice, and none of them ever achieved the standing of Fahrenholz's rule. A few rules, such as Janickis' and Bozkov's rules (Eichler 1973), do not apply to chewing lice at all, and are not dealt with here. Harrison's rule is also frequently referred to by Eichler (e.g., Eichler 1976, 1990), and was discussed above. All other rules are summarized in Appendix 3 and discussed below.

Szidat's rule

"The tendency towards higher development in the host also affects their (above all permanent) parasites, so that within comparable larger [taxonomic] units of hosts, hosts with a relatively lower organizational level (primitive hosts) are parasitized by parasites with a relatively lower organizational

level (primitive parasites)" (Eichler 1942: 77). "[…] in many cases, not only the relationships [between the lice], but also the organizational level (evolutionary level) of the parasites parallels [that of the hosts]" (Eichler 1963: 206).

The most detailed rationale for Szidat's rule and its application to chewing louse evolution and classification was given by Eichler (1948*a*: 40, 1963: 206), who exemplified this rule by noting that "parasites of primitive, older bird orders in general are generally circumfasciate", that is, they have heads with an unbroken marginal carina. The idea that this state is primitive (in the sense of a plesiomorphic character present in the ancestor of all ischnoceran lice) was widely accepted at the time (e.g., Clay 1951*a*; Timmermann 1957). The sheer variation in sutural patterns of the preantennal ischnoceran head would suggest that the sutures are not, strictly speaking, homologous, and are the result of convergence. Moreover, these sutures are unique to the **Ischnocera** and do not occur in lice of the other suborders. The basic assumption—that ancestral **Ischnocera** were circumfasciate—may thus be essentially correct. However, as no fossil **Ischnocera** are known, this cannot be assumed without qualification.

Assuming that the circumfasciate state is ancestral, and the various non-circumfasciate states are derived and convergent, the distribution of circumfasciate species does not predict relationships among the hosts. For instance, goniodid lice are circumfasciate, but they are distributed across two very distantly related host orders (Price *et al*. 2003; Johnson *et al.* 2011; Reddy *et al*. 2017). Notably, many groups of birds are parasitized by both circumfasciate and non-circumfasciate lice; for instance, both the circumfasciate *Coloceras* Taschenberg, 1882, and the non-circumfasciate *Columbicola* parasitize the same species of pigeons (Price *et al*. 2003). If host switching is assumed to have a negligible effect on louse evolution, these birds cannot be assessed for their 'primitiveness' based on their parasitic chewing louse fauna. Moreover, circumfasciate and non-circumfasciate lice sometimes occur in closely related genera, or even within the same genus (Gustafsson & Bush 2017; Gustafsson *et al*. 2019*b*). This makes the division of 'primitive' and 'derived" louse genera difficult to maintain if this is based primarily on the state of the preantennal head.

Timmermann (1957: 18–19) discussed a different example, noting that the mandibles of *Trochiloecetes* Paine & Mann, 1913, with species parasitic on hummingbirds "have developed a stiletto for puncturing" [bird skin], which allowed the lice in this genus to consume blood rather than eat feathers. The mandibles of *Ricinus* De Geer, 1778, from passerines are similar, "transformed into weak, pointed toothlets", which would allow them to both "scratch" the bird's skin to get blood, and eat feathers. In contrast, other lice on passerines only possess biting mandibles for eating feathers. Timmermann (1957) used this proposed transition from feather-eating through mixed feeding to the specialized blood-letting of *Trochiloecetes* to postulate that hummingbirds are passerines; however, this hypothesis has not been supported by recent research based on data derived from the hosts (e.g., Reddy *et al*. 2017).

Overall, the division of extant taxa into primitive and derived is an outdated viewpoint, which is hard to reconcile with modern evolutionary thought. The observation that virtually all known head lice are non-circumfasciate, but all body lice are circumfasciate (Johnson *et al*. 2012), suggests that the state of the preantennal head may be more related to similarities in selection pressure within a microhabitat on different host groups, than with 'primitiveness' of the louse lineage as such. Note that Krasnov *et al.* (2016) found that 'primitiveness' (as estimated by clade rank of small mammals and their associated fleas) only partially supported Szidat's rule, and that the relationship in some cases was the opposite.

Nevertheless, if the actual usage of the rule is ignored, the literal meaning of this rule is essentially correct. Assuming both taxa have survived in association with each other, less apomorphic hosts in earlier geological eras would have been parasitized by less apomorphic lice; compared to the extant taxa, both the geologically older host and louse taxa would have been more 'primitive'. However, this is not how Szidat's rule was ever discussed or used in the louse literature.

Eichler's rule

"Among systematic categories of equal rank, those taxa exhibiting a rich [diverse] branching pattern also possess a larger diversity of the (mainly permanent) parasite fauna than those with fewer branches" (Eichler 1942: 78). "[I]solated groups of hosts often do not harbor very many kinds of parasites, whilst in comparable groups of hosts with many species of near affinities to other groups of hosts we may find not only many species (each host with its own louse) but also a differentiation into many genera which may live together on the same host. From this we may deduce the rule that the more a given host is infested by different genera of parasites the larger must be the group to which this host belongs" (Eichler 1948*a*: 595).

This rule was originally named "III. Entfaltungsregel" by Eichler (1942: 78) but renamed the "Divergence rule" by Eichler (1948*a*) and "Eichler's rule" by Hopkins (*in* Eichler 1948*a*: 598). Eichler (1963: 207) included a graph that generally seems to support this rule, and recent taxonomic work on the *Philopterus*- and *Brueelia*-complexes also suggest that at least on higher taxonomic levels of the hosts, this rule may be somewhat accurate (Mey 2004*a*; Gustafsson & Bush 2017). Vas *et al.* (2012) tested the rule formally and found a strong correlation between species richness of a host order and genus richness of the lice parasitizing that order. The recent revisionary work on the *Brueelia*-complex starting with Gustafsson & Bush (2017) has revealed an underappreciated diversity of lice on songbirds, which likely reinforces this result.

Vas *et al*. (2012) raised two important points that may explain this pattern. First, diverse clades of hosts imply that interruptions of gene flows between host populations have been common during their evolution. Assuming at least some limits to host switching at some points during this radiation, this implies that interruptions of gene flow between the lice may also have occurred frequently. If these conditions prevail over long evolutionary periods, we would expect at least some subclades of lice to be sufficiently different according to some criterion to be recognized as different genera. This is likely true even if host switching is common, or varies over time, as long as there are sometimes some limitations to host switching (physical distance between hosts, if nothing else).

Secondly, Vas *et al.* (2012) pointed out that in species-rich host groups, lice have better chances to establish "parallel populations" on different host species. This would imply that even if the population of a louse species becomes extinct on one host species (or one host species becomes extinct), it may survive on another. The louse lineage would thus have greater chances of survival than a lineage that is highly specialized to a single host with no or few extant close relatives. The extinction of one louse species on one host may then leave an empty niche on that host, which could be exploited by another group of lice following host switching or by radiation on the host. Unevenly distributed repetitions of these processes within a host group may thus over time lead to a diverse louse fauna.

Even if Eichler's rule appears to be valid, it cannot be used to predict relationships of hosts. For instance, Eichler (1976: 36–37) argued that the hoatzin [*Opisthocomus hoazin* (Müller, 1776)], was not as evolutionarily isolated as previously thought, because of its large and diverse louse fauna. This argument followed from his 1948*a* formulation, which states "from this we may deduce the rule that the more a given host is infested by different genera of parasites the larger must be the group to which this host belongs". As the unit of analysis in Eichler's 1948*a* formulation is parasites/host species, we would expect **PASSERIFORMES**—the largest bird order, encompassing about half of all known birds (Clements *et al*. 2021)—to comprise many species that are parasitized by truly gigantic numbers of louse genera. Instead, passeriforms do not generally differ much from the general observation that the number of louse species on a given host species is rather constant at 3–5 across most bird orders (Price *et al.* 2003). The main exceptions to this observation are instead orders such as **GALLIFORMES**, **PROCELLARIIFORMES** and **TINAMIFORMES**, all of which are relatively small orders (Clements *et al*. 2021). In the case of the hoatzin, recent data from the hosts (e.g., Reddy *et al*. 2017) has shown that Eichler's (1976) argument is wrong.

Timmermann's rule

"[H]osts that are unusual or strongly differ from the norm in their morphology or their behavior are often parasitized by correspondingly aberrant parasites" (Eichler 1962: 286). "The explanation […] is that in the course of evolution, changes in the host also create new environments for the permanent parasites" (Eichler 1962: 286).

As a host group that is defined as "unusual or strongly differ[ing] from the norm" is by necessity smaller than the host group it is compared with, this rule follows directly from Fahrenholz's rule. If the numbers of species in the two groups had been reversed, the 'aberrant' group would have been the norm from which the smaller group deviated. Assuming that both taxa have been isolated from their relatives, and that co-speciation has occurred, we would expect the lice on the smaller group to look different from lice on the bigger group. It is then a matter of perspective to determine which group of lice is 'aberrant'.

Timmermann's rule was rarely discussed by Eichler, and the examples supporting it are few. Eichler (1962, 1976) used avocets (*Recurvirostridae*) and their lice as an example, but did not explain why either the hosts or the lice are particularly 'aberrant'. Eichler (1973) referred to Timmermann (1971) as a source of louse examples for this rule, but Timmermann also only discussed avocets. Although Timmermann's discussion is much more detailed than that of Eichler, Timmermann (1971) also did not define strictly why the avocet and its lice should be considered aberrant. This rule appears to be just a formalized way of saying that small host groups have lice that are morphologically different from closely related large host groups.

Overall, Timmermann's rule is by no means the norm. Some small host families are parasitized by lice that have wide distributions, such as *Brueelia*, *Colpocephalum* Nitzsch, 1818, *Guimaraesiella*, *Menacanthus* Neumann, 1912, *Myrsidea*, *Philopterus* and *Saemundssonia* Timmermann, 1936 (Price *et al*. 2003; Mey 2004*a*; Gustafsson & Bush 2017). In contrast, some small families have host family-specific lice (e.g., *Buphagoecus* Gustafsson & Bush, 2017, *Oculomenopon* Price & Hellenthal 2005). In many cases, members of the same host family may be parasitized by both specific and generalist louse genera (e.g., in the *Alaudidae*, *Campephagidae*, *Corvidae* and *Meliphagidae*; Mey 2004, 2017; Gustafsson & Bush 2017; Gustafsson *et al*. 2019*b*). There are no general association patterns among lice that could form the basis of a universal application of Timmermann's rule.

Złotorzycka's and Dubinin's rules

Złotorzycka's rule: "Within a group of birds, genera of larger birds are parasitized by more different louse genera, or, lice have diversified more on genera of larger birds, apparently in accordance with the larger amount of available niches" [on larger birds] (Eichler 1973: 445). "[O]n host species with larger body size, lice have diversified more strongly (into more species) than on smaller hosts" (Eichler 1976: 37).

Dubinin's rule: "[T]he number of parasite species living in a host is directly correlated with the diversity of body coverings [i.e., types of feathers, hairs, scales, etc.]" (Eichler 1976: 37). Eichler (1976) pointed out that this rule overlaps with Złotorzycka's rule, but that the two represent two different aspects of evolution.

Eichler (1973, 1980*c*) gave several examples supposedly supporting Złotorzycka's rule, including crows and allies (*Corvidae*), thrushes (*Turdidae*), avocets (*Recurvirostridae*), vultures (*Accipitridae*), tinamous (**Tinamiformes**), and the hoatzin. However, no detailed argument was given for any of these examples. Eichler (1976) gave no examples of either rule, and this appears to be the only publication where Eichler discussed Dubinin's rule, as far as is known to us. It is therefore unclear what the evidentiary basis is for Dubinin's rule concerning chewing lice.

These rules make intuitive sense, as larger and more diverse habitats may enable the specialization of more louse lineages on different parts of the host's body. The recurring pattern of close relationships between lice of different ecomorphs (Johnson *et al*. 2012) may indicate that such processes are real. In particular, the high number of louse genera on galliform, tinamiform and many procellariiform hosts (Price *et al.* 2003), which are often at least large-bodied, may further support these rules. Conversely, the smallest-bodied birds are hummingbirds, which have a somewhat depauperate louse fauna given their diversity (Price *et al*. 2003; Dalgleish & Price 2003).

However, Vas *et al.* (2012) found no correlation between host body size and generic richness of lice. Possibly, this is connected to the observation that there seems to be an upper limit to generic diversity of lice in almost all host orders. The number of different louse species on most host species is between 3–5, regardless of host size. For instance, the largest gull species [*Larus marinus* Linnaeus, 1758, length 61–78 cm; Olsen (2003)] and the smallest sandpiper species [*Calidris minutilla* Vieillot, 1819, length 13–15 cm; Hayman *et al*. (1996)] are each parasitized by four different louse species (Price *et al*. 2003; Gustafsson & Olsson 2012*b*). To some extent, this may be explained by lice of different ecomorphs competing for the same food resources, even if they habitually occur on different parts of the host's body (Bush & Malenke 2008). Moreover, this rule does not apply at all to many groups of very large birds, such as ratites (except tinamous), penguins, storks and herons (Price *et al*. 2003).

In conclusion, these are rules that apply to a small subset of host taxa, not generally, but Dubinin's rule is probably more applicable than Złotorzycka's rule.

Macronectes *rule*

"Host species [mainly larger species] with a particular eagerness to disperse are often parasitized by a diverse, 'thrown-together' louse fauna" (Eichler 1973: 448). This rule was meant to apply mainly to larger, somewhat 'aberrant', hosts, which "to a certain extent function as depot- or storage hosts for different forms of lice" (Eichler 1976: 37; see also Timmermann 1971). This concept may be different from a reservoir host since Eichler seems to have intended this term to be understood more as an "archive" detailing the lice which the host had come into contact with; lice would come ***to*** this host, but not necessarily spread ***from*** it.

Timmermann (1971: 159) defined this 'thrown-together' fauna as one that has no host family-specific lice, despite the host being evolutionarily isolated from close relatives (i.e., morphologically different enough to have its own family, which ideally should be monotypic or at least not diverse). Apart from *Macronectes* Richmond, 1905, Timmermann (1971) also mentioned the lice of *Haematopus* Linnaeus, 1758 and *Chionis* Forster, 1788 as examples of this rule. However, birds in these three genera all have typical lice for their orders: *Macronectes* has louse genera commonly found on other procellariiforms, and species of *Haematopus* and *Chionis* have louse genera common on other charadriiforms (Price *et al.* 2003).

There is also a contradiction between the *Macronectes* rule and Timmermann's rule. The former predicts that 'aberrant' large-bodied hosts should have a louse fauna comprising genera found on different hosts, whereas the latter predicts that 'aberrant' hosts should have 'aberrant' lice. Among the examples used, the *Quadraceps*-complex lice on *Chionis* were later considered 'aberrant' enough to warrant their own subgenus (Eichler 1982), thus following Timmermann's rule, but not the *Macronectes* rule. Considering that, in the classification of Złotorzycka (1967), almost every charadriiform family is parasitized by a different genus of *Quadraceps*-complex lice, it is possible that all contradictions between the *Macronectes* rule and Timmermann's rule would be resolved like this, in favour of the latter rule. This prediction is supported by the observation that Timmermann's rule—which favors taxonomic units of lice that depend entirely on host associations—is in line with Fahrenholz's rule,

whereas the *Macronectes* rule implicitly assumes that host switching is a significant influence on the assembly rules of louse communities.

The best example of the *Macronectes* rule may be the louse communities of domestic poultry (Gustafsson & Zou 2020*a–b*). Globally, these louse communities are 'thrown-together', comprising a mixture of lice found on wild populations of the same hosts and lice that are otherwise only found on other galliforms (Emerson 1956). Notably, the louse communities of domestic poultry differ between different parts of the world (Fabiyi 1972, 1980, 1986; Sychra *et al.* 2008; Alahmed *et al.* 2017; Fabiyi *et al*. 2017; Gustafsson & Zou 2020*a–b*). These 'thrown-together' communities are the result of movements of lice between host species in artificially constructed mixed-species flocks, and thus evidence against Fahrenholz's rule.

Under natural circumstances, the closest confirmed example may be the occurrence of *Haffneria* Timmermann 1966 on skuas (Timmermann 1966; Cohen *et al.* 1997). This genus is closely related to the *Philoceanus*-complex otherwise mainly found on procellariiform hosts. The occurrence of the genus *Saemundssonia* on some procellariiform groups and tropicbirds, and the occurrence of the penguin louse genus *Nesiotinus* Kellogg, 1903 on some diving petrels (Mey 2010), may also represent limited examples. However, in these and other potential examples, most of the louse groups known from the host are those expected based on the host relationships. No bird species is known to us which has a truly eclectic louse fauna, where no louse genus is closely related to those occurring on close relatives of the host.

Ass-Knorr's, Rubcov-Ass' and Samšiňák's rules

Ass-Knorr's rule: "[T]he adaptations of parasites happen in two steps: (1) the localization [local adaptation] on the host; (2) the development of host specificity (alongside the diverging of the host)" (Eichler 1976: 36).

Rubcov-Ass' rule: "[T]he tempo of evolution of the hosts is persistently higher than the tempo of evolution of the parasite" (Eichler 1976: 36).

Samšiňák's rule: "[…] the principle that when applying the parasitophyletic rules on the parasitic forms on a genus of hosts, the possibility of differences in evolutionary rates among the different host species is of fundamental importance" (Eichler 1980b: 194).

These three rules are closely associated and form an underlying basis for Fahrenholz's rule by seeking to explain how the diversification of chewing lice on a group of hosts happens. We have found no further mention of these rules than their original formulations (Eichler 1976, 1980*b*), and no discussion of them based on examples from chewing lice. Samšiňák's rule is based on mites parasitic on beetles and refer to statements given by Samšiňák (1971; cited in Eichler 1973: 442). Moreover, Eichler (1976) gave no indication of the specific statements made by Ass, Knorr and Rubcov on which the rules named after them were based.

Ass-Knorr's rule is likely valid, but data are limited. The rule makes intuitive sense if opportunities for host switching are limited or stochastic. Transfer experiments have shown that some adaptations to the host may occur very rapidly, without speciation in either taxon (Bush *et al*. 2019; Villa *et al*. 2019), supporting Ass-Knorr's rule. However, it is not clear whether the same pattern can be seen in louse taxa that readily switch between host species (see above), and thus may not have time to adapt to any specific host. These lice may never adapt to local conditions on a single host, nor co-evolve with any host, yet still adapt to changing circumstances in the set of hosts as a whole (e.g., changes in host community composition)..

Rubcov-Ass' rule is likely wrong, as the evolutionary rate in lice is markedly higher than that of other insects (see above). Moreover, it directly contradicts Ass-Knorr's rule, which implies that the

evolutionary rate is higher in parasites than in their hosts, or they would not be able to adapt to their host before the host speciated. Eichler (1976: 36) explicitly tied these two rules to Fahrenholz's rule and the possibility to use the lice to trace the relationships of hosts that have evolved "to the point where their original relationships have become blurred". It should be noted that Rubcov-Ass' rule is the same as Manter's first rule (Hoberg *et al*. 1997).

Samšiňák's rule is less clear to us, as Samšiňák's original statement (not seen by us) and Eichler's reformulation do not seem equivalent. As quoted by Eichler (1973: 442), Samšiňák seems to have intended his observation to mean that Fahrenholz's rule does not apply on lower taxonomic host levels, where the time when the host species evolved is more important. Eichler (1980*b*) instead seemed to interpret this as having to do with differences in evolutionary speed among hosts in the same group.

In practice, Eichler used Samšiňák's rule to infer that in cases where the same apparent louse species occurs on multiple hosts, these hosts must be closely related and recently evolved. Eichler (1980*b*) used the *Trinoton* Nitzsch, 1818, species of *Dendrocygna* Swainson, 1837 (derived from Clay 1963, 1976*a*) as an example, stating that the occurrence of the same louse species on three New World species of *Dendrocygna* indicates that there simply has been no time for *Trinoton* to speciate. This argument thus follows Ass-Knorr's and Rubcov-Ass' rules. Eichler then (1980*b*: 195) connected this to Samšiňák's rule by pointing out that the distribution pattern of these *Trinoton* in not geographic, but "the divergence of the parasites depends on the time and divergence of their hosts". By then explicitly invoking the use of hospitosubspecies on different host species, Eichler (1980*b*) tied this back to Fahrenholz's rule and the Eichlerian methodology.

These three rules are thus closely associated with Fahrenholz's rule and can be seen as the more detailed mechanisms by which Fahrenholz's rule is thought to operate, erected to further justify the use of host classification for the establishment of louse classifications. Inasmuch as they make testable predictions, these rules have never been formally tested for chewing lice.

Kéler's, Janiszewska's, Breev's, Dogiel's and Grunin's rules

Kéler's rule: "Large population increases of one [louse] species suppresses the populations of other [louse species] on the same host to a few individuals" (Eichler 1951*b*: 481).

Janiszewska's rule: "Hosts belonging to a rather common species have often a much more diversified parasitic fauna than species of absolute greater rarity" (Janiszewska, cited in Eichler 1973: 445). "Species with a larger absolute population size generally have a more diversified [*i.e.,* a more species-rich] parasite fauna than species with a smaller absolute population size" (Eichler 1980*c*: 136).

Breev's rule: "[…] the principle that, when the population size of a host decreases, then the population size of the parasites also decreases (although the latter process is quicker than the former)" (Eichler 1980*b*: 194).

Dogiel's rule: "[…] the principle that host switching of a host-specific parasite from a host that is declining or becoming extinct is not possible, and on the contrary is only possible when the host population size is large" (Eichler 1980*b*: 194).

Grunin's rule: "[…] the principle that some parasite groups only occur on hosts that have a relatively high population size" (Eichler 1980*b*: 194).

These rules all seek to explain the presence or absence of lice on a host species. Apart from Kéler's rule, none of these rules were originally applied to lice, and we have not found any subsequent discussions that sought to explain louse distributions following these rules. In general, case studies of lice on hosts with decreasing population sizes are lacking, and the data necessary to test these rules is lacking.

Several pieces of evidence for Kéler's rule were given by Eichler (1963: 107–109), and similar relationships between louse genera found on the same host specimens are often reported. However, no general review of these prevalence data has been published to determine whether differences in population numbers between different louse genera on the same host are constant between hosts, or if competition between lice is the cause of such differences. Bush & Malenke (2008) showed that lice of different genera do compete, and Malenke *et al*. (2011) showed that this may also be true for congeneric lice. Kéler's rule needs further study.

Eichler (1973: 445) stated that a "preliminary check" of birds and lice would support Janiszewska's rule. Certainly, domestic chicken, one of the most common birds worldwide, has an extraordinarily diverse louse fauna, presumably assembled from several different sources (Gustafsson & Zou 2020*b*), which speaks in favor of this rule. However, in domestic birds, large louse faunas may be artificially inflated by unnaturally close association with other host species under conditions that are favorable to louse transmission. As such, they may be bad examples for the validity of Janiszewska's rule as applied to wild animals.

Data that could be used to evaluate Breev's rule are rare. Galloway & Lamb (2015) found that prevalence of *Mulcticola macrocephalus* (Kellogg, 1896) decreased over time, in line with the decrease in abundance of its host in Manitoba. They suggested that as the abundance of the host declines, the "probability of successful transmission of ectoparasites also declined". The lack of some louse species in fragmented habitats may also be an indication that Breev's rule has some validity (Bush *et al.* 2013), but more data and formal tests are needed.

Examining the known louse associations of endangered hosts listed by Rózsa & Vas (2015) suggests that rare birds are parasitized by fewer lice than congeners. However, it is not clear whether this is because rare hosts have been sampled less frequently than common birds. At least some near-extinct hosts have markedly less diverse louse faunas than closely related, more prevalent, host species do. For instance, only one species of louse is known from the New Zealand kakapo (*Strigops habroptilus* Gray, 1845), but all other members of the *Strigopidae* are parasitized by 3–4 louse species each (Palma 2017). In contrast, Gustafsson *et al*. (2015) listed three new records of lice from the endangered *Columba janthina* Temminck, 1830, suggesting that in at least some cases the louse fauna of rare birds may be as diverse as that of more common birds in the same family. The louse fauna of the critically endangered crested ibis [*Nipponia nippon* (Temminck, 1835)] is not less diverse than that of most other ibises (Price *et al*., 2003), despite the host being almost extinct in the 1980s (Gustafsson *et al*. 2021*b*).

Dogiel's rule seems to be based on the ideas that [1] total population size of parasites is higher on common hosts, as there are most hosts for the parasites to live on, and [2] rare hosts less often encounter other hosts, which would make host switching less likely (see Eichler 1980*b*: 194). The first condition seems self-evident, but the second is not necessarily true and would depend on whether there are opportunities for host switching. To our knowledge, no data useful for testing this rule have ever been published for lice.

The result of Grunin's rule may perhaps be observed in the scarcity of certain louse genera, such as *Bonomiella* Conci 1942. Unlike other louse genera found on pigeons (e.g., *Columbicola*; Adams *et al*. 2005), very few species of *Bonomiella* are known, and these are also not commonly encountered (see Galloway & Palma 2008; Cicchino & González-Acuña 2012), while all their host species are widely distributed, implying that the total host population sizes are large. Grossi & Proctor (2021) found *Bonomiella* to have very limited distributions in Canada, with most collection sites being areas where the louse fauna on domestic pigeons was particularly diverse. The reason for this rarity is unknown, and puzzling, given that Rem & Złotorzycka (1974) found that *Bonomiella* readily leaves the dead host and can move quickly on artificial surfaces, which would indicate that they should be able to spread throughout the host population rapidly.

FIGURE 3. Size comparison of 'primitive' lice. Larger picture: male of *Goniodes* cf. *megaceros* ex *Lophophorus sclateri* Jerdon, 1870. Smaller picture: male of *Goniocotes gallinae* (De Geer, 1778) ex *Gallus gallus* (Linnaeus, 1758). Both photos are at the same scale; the picture of *Goniodes* has been assembled from many different photos, due to its large size. By contrast, the specimen of *Goniocotes* could easily be accommodated within a single photo, as well as within the head of the specimen of *Goniodes*. The sizes of the hosts of these lice are comparable for males (*G. gallus*: 65–87 cm; *L. sclateri*: 64–68 cm), but not for females (*G. gallus*: 41–46 cm; *L. sclateri*: 62–64 cm) (Madge & McGowan 2002).

Possibly, if Kéler's rule is valid and common louse species often 'suppress' [i.e., outcompete] other species of lice on the same hosts, this may explain the rarity of some louse genera: only when the host population is large enough can these lice find refuge hosts that are not 'overwhelmed' by the common species, and thus survive. As louse populations are often aggregated (e.g., Rózsa *et al.* 1996), large local population sizes and coloniality may facilitate the survival of rare louse species. Notably, another rarely encountered genus, *Machaerilaemus* Harrison 1915*b*, is widely distributed across many host families, and at least some host species of most species in this genus are widely distributed and common (Price *et al.* 2002, 2003).

Cope's rule

This rule is not specific to parasitology but is the observation that body size tends to increase when a single lineage is followed through the fossil record (Rench 1948). This was transformed by, e.g., Eichler (1973: 442, 1976: 37) into "primitive forms are smaller and specialized forms are larger". As the fossil record of chewing lice is largely non-existent, the utility of Cope's rule on lice cannot be tested. The only known fossil amblyceran is much larger than most extant amblycerans (Wappler *et al*. 2004), but the host associations and relationships of this louse are unknown.

However, 'primitive' was at the time used in the sense of 'looking primitive' (being circumfasciate; see above) and could include extant taxa. As such, goniodids could be called 'primitive', whereas lice like *Philopterus* could not. The expectation would thus be that circumfasciate genera of lice should in general be smaller than non-circumfasciate genera. This is difficult to reconcile with the enormous size variation in both groups. For instance, some species of the circumfasciate genus *Goniocotes* Burmeister, 1838 easily fit inside the head of some species of the equally circumfasciate genus *Goniodes* Nitzsch, 1818 (Fig. 3). Lice in the *Brueelia*-complex, which includes both circumfasciate and non-circumfasciate genera, are all roughly the same size (Gustafsson & Bush 2017). In general, Harrison's rule is probably more relevant to the evolution of louse size than Cope's rule.

Summary of cybernetics

None of the evolutionary rules formulated by Eichler gained the same status as Fahrenholz's rule, but echoes of some are heard in the taxonomic works of Eichler and Złotorzycka. For instance, Rubcov-Ass' rule underlies the argument (see above) that lice are always adaptive to conditions on the host, which in turn prevents successful host switching. Timmermann's rule also indirectly justifies the splitting of widely distributed genera into smaller host-specific genera, especially in cases where the hosts are very different. This rule can be seen at work in the discussion on flamingo lice (see below). More often, these rules are discussed in the abstract, giving few or no direct examples (e.g., Eichler 1976). It is therefore difficult to know to what extent Eichler believed that these rules applied to louse ecology and evolution. However, Eichler (1976: 37) considered lice as "parasites *par excellence*" because so many of the rules could be studied in lice.

Nevertheless, these rules were all integrated by Eichler (1976, 1980*c*), who aimed to discover a set of overlapping, complementary, and interconnected natural laws that would allow for the assembly of a cybernetic system of self-organization, self-improvement and self-regulation that could explain the evolution of host-parasite relationships without recourse to any outside, non-mechanistic, forces. Eichler (1976: 38) highlighted the interactivity of these laws by referring to them as a "dialectic indicator of evolution", which may be interpreted as a system of feedback loops that drive the evolution of both taxa. The fact that only Fahrenholz's rule became prominent may be because this is the most useful one for the type of research Eichler and Złotorzycka were doing during the 1960–90s. The

more ecological rules (Grunin's, Breev's) might have been more widely known, and widely tested, if the focus of Eichler's work had been more ecological.

Eichler's parasitological rules are a product of their time and rely on the assumptions about louse biology and evolutionary theory prevalent at the time. The utility of rules that predict the biology of 'aberrant' or 'primitive' lice is limited today, as evolution is understood differently. Others, such as the Rubcov-Ass rule, may be explicitly wrong (see above). However, together these rules form the basis of an understanding of why Eichler, Złotorzycka and their collaborators and students acted as they did. For instance, accepting that Timmermann's rule is correct makes it easier to accept the splitting of louse species occurring on smaller host groups into their own genera, especially if the hosts themselves are 'aberrant'.

Surveying these phylogenetic rules also highlights how little the lice were considered to be masters of their own destiny. Evolutionary changes happen to hosts only, and the lice are swept along with these changes and forced to adapt to them. Rubcov-Ass' rule states that lice evolve slower than their hosts, and Ass-Knorr's rule that host specificity follows adaptations to the host. If the host is successful, Janiszewska's rule allows for the diversification of lice on the host; if the host is unsuccessful, Dogiel's rule states that the lice have no escape and Breev's rule states that the lice will also decline. If the host manages to survive, but not radiate, Eichler's rule states that the lice will not be able to diversify, and Timmermann's rule states that these lice will, by some definition, become 'aberrant' in parallel with their hosts. The exception would be if the host is large (Złotorzycka's rule) or the host has many different feather types (Dubinin's rule), or if the host is prone to dispersal and thus can assemble lice from many different sources (*Macronectes* rule). In all these steps, the lice themselves have no agency, and simply become an extension of the evolutionary history of the host. From this viewpoint, it is easier to justify using Fahrenholz's rule to make the classification of lice a mirror-image of that of the hosts.

The long shadow of Fahrenholz

Apart from Eichler, few louse researchers made theoretical contributions to Fahrenholz's rule and the Eichlerian methodology. For instance, Złotorzycka only discussed the methodology in publications co-authored by Eichler (e.g., Eichler & Złotorzycka 1971) or as a brief justification for the taxonomic actions that were the main focus of her manuscript (e.g., Złotorzycka 1964*b*). Many taxonomists used the methodology outlined here, but almost all its development originated with Eichler.

However, the growing distance between Eichler and his western contemporaries [e.g., Emerson, quoted in Mey (2007: 95)] does not mean that his theories were without influence. To some extent, they have remained the basic framework that is tested in phylogenetic publications to this day (e.g., Lyal 1986; Rózsa 1991; Johnson *et al.* 2006; Gustafsson & Olsson 2017). Here, we summarize the influence of Eichler and his methodology on louse research in general.

Reverse Fahrenholz

It must be stressed that the ideas about chewing lice and their ecology, evolution and distribution that underlie Fahrenholz's rule and the Eichlerian methodology were not limited to Eichler, Złotorzycka and their collaborators. The differences in the classification systems of Eichler and Clay are not due to profound differences in their views of the biology of lice, but in differences in their preferred methods of classification. Eichler and Złotorzycka may have been 'splitters' whereas Clay and others were 'lumpers', but below the surface, they shared a similar view of louse evolution.

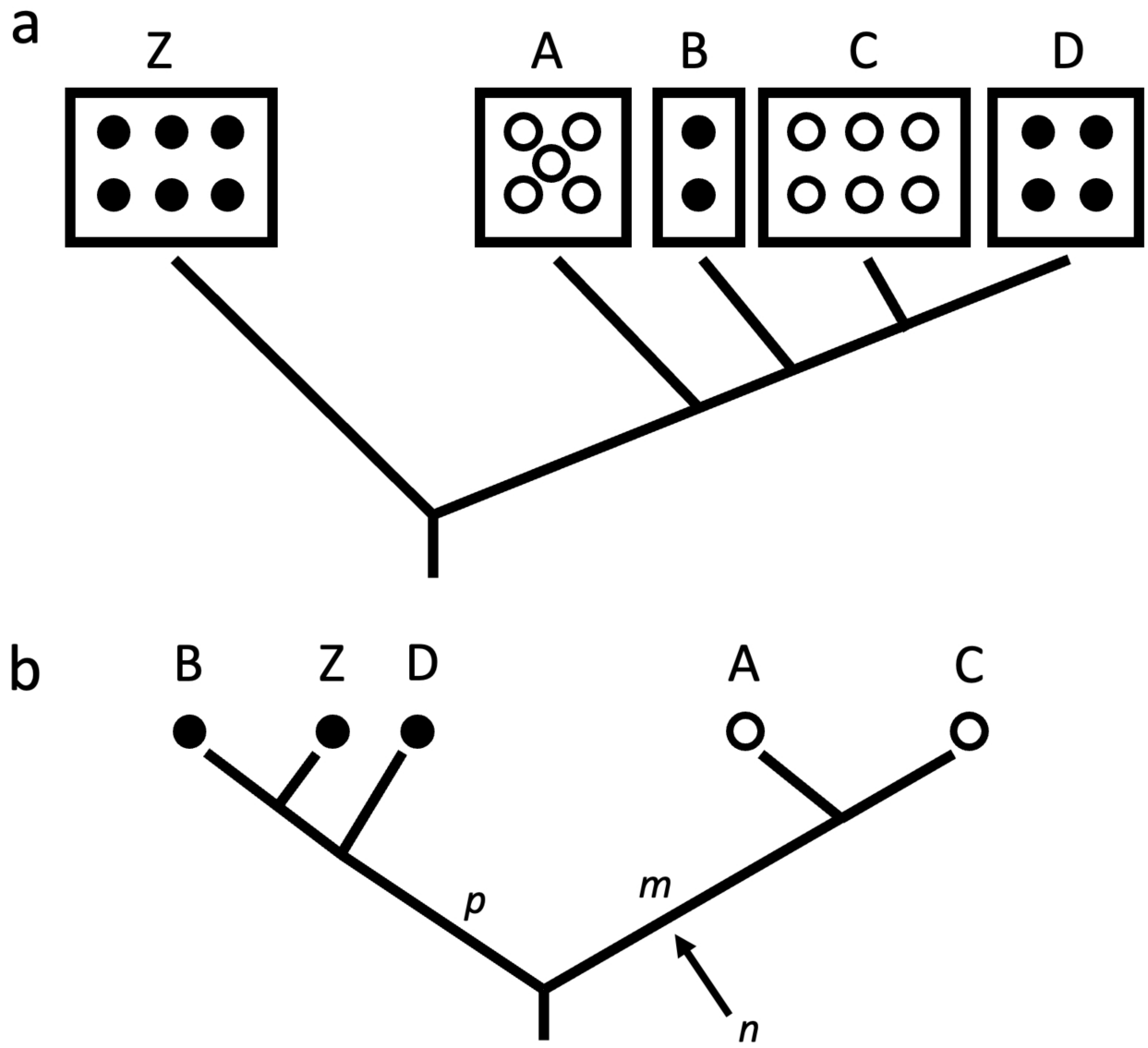

FIGURE 4. Clay's proposed methodology for delimiting genera of chewing lice. [**a]** In this model, boxes (labeled A–D and Z) represent host groups, of which A–D are closely related, but Z is more distant. The tree below the boxes was not included by Clay (1951*a*) but is added here to clarify relationships between the host groups. Each host group is parasitized by lice (represented by circles) that can be separated based on certain characters (*x* and *y* in Clay's terminology, here represented by open and closed circles). As the host groups A–D are closely related, Clay argued that it was 'not permissible' to separate generically the louse species on host groups B, D and Z from those on A and D. The close relationship of the hosts meant that their lice must be closely related, and thus characters *x* and *y* must be uninformative. Instead, Clay (1951*a*) stated that "All the species on the five host groups must be included in one genus". **[b]** This model puts Clay's statements into a modern context, by placing her hypothetical louse taxa in a cladogram, with host associations indicated above. Clay's statement here translates to an admonition that the five louse species must be placed in the same genus, regardless of the length of branches *p* and *m*, and—implicitly—regardless of the presence of other branches in, e.g., position *n*.

For instance, Hopkins (1942) and Clay (1949, 1950*a*) agreed that host switching was rare, Clay (1949) agreed that speciation *in situ* by vicariance as the hosts speciated was the standard mode of speciation for lice, and Clay (1953, 1958) agreed that the distribution of closely related lice on distantly related hosts implied that these hosts were closely related. Both Hopkins (1942) and Clay

(1946, 1947, 1950*b*, 1951*b*) argued that relationships among lice could and should be used as an aid to revealing relationships between hosts, including Hopkins' maxim that we should "regard one correspondence [between louse genera on distantly related hosts] with reserve, two as establishing a strong probability, and three as a certainty [that the hosts are in fact related]" (Hopkins 1942).

Nowhere is the influence of the Eichlerian methodology more obvious than in Clay's introduction to the **ISCHNOCERA** (Clay 1951*a*: 173, fig. 1–2). She gave two examples of situations in which it is "not permissible" to separate groups of lice into separate genera (Fig. 4). In the first situation, she stated that if a genus was "based on characters which means the inclusion also of some of the species parasitizing not closely related hosts, then such a group does not contain a natural association of related species". In both her examples, one larger group of hosts is parasitized by lice of varying morphology, whereas one or more smaller, distantly related host group is parasitized by lice showing certain characters that are also found on some, but not all, lice parasitizing the larger group. In both cases, the lice should be congeneric according to Clay: "all the species […] must be included in one genus".

Clay's methodology can be well illustrated by the *Brueelia*-complex (Clay 1951*a*: 186–187). The variation in the morphology of the preantennal head varies considerably within the complex, especially with regard to the presence or absence and extent of the dorsal preantennal suture. Overall, almost every possible state of the suture is found in at least one species within the *Brueelia*-complex (Gustafsson & Bush 2017; Gustafsson *et al.* 2019*b*). Clay (1951*a*) argued that *Guimaraesiella* cannot be separated from *Brueelia*, not only because of the intermediate states of the preantennal area combining these genera, but also because such a division would "mean the association of a number of species not forming a natural group". In particular, such a division would mean that *Guimaraesiella* would have to include lice parasitizing birds-of-paradise, thrushes, and ground-finches. As these hosts do not form a natural group together, Clay (1951*a*) assumed that their lice also cannot form a natural group. However, recent genetic and morphological data indicate that the '*Guimaraesiella*-type' lice are more closely related to each other than either of them are to '*Brueelia*-type lice', and that these two types of lice do form natural groups (Bush *et al*. 2016; Gustafsson & Bush 2017). If host associations are ignored, and characters of the lice themselves are given precedence, the groups can easily be separated.

In a sense, Clay's methodology is the reverse of Fahrenholz's rule. The former states that since the hosts are closely related, the lice must be closely related, the latter that because the hosts are different, the lice must be different. Both are possible only when strict co-speciation is assumed to be the norm, and the importance of host switching is assumed to be negligible.

Chewing lice and how to recognize them

The primary consequences of the Eichlerian methodology concern the taxonomy and identification of lice. The most detailed methodology for determining whether two louse populations on different host species are conspecific was published by Eichler & Złotorzycka (1971) and Eichler (1980*a*). In practice, this methodology meant that host associations were the "*de facto* species criteria" (Mey 1998*b*: 80).

However, for names to be available under the *International Code of Zoological Nomenclature* (Anonymous 1999; hereafter 'the *Code*'), intrinsic characters that ***purportedly*** differentiate a new species need to be associated with the name. Names that do not fulfill this criterion are *nomina nuda* (singular: *nomen nudum*), which have no nomenclatural standing. In a sense, these names do not exist, and the species are not described. The keyword is ***purportedly***. The *Code* does not specify the number and sort of characters that need to be included, nor does it mandate that the characters

actually serve to unfailingly separate the new species from all its relatives. This is a subtle distinction that is often overlooked (e.g., Mey 2017: 90). This has led to a perceptible difference in the quality of descriptions and illustrations between adherents of the Eichlerian methodology and most other louse taxonomists.

For instance, the original description of *Falcolipeurus josephi* by Tandan & Dhanda (1963) covers almost four full pages, with a total of five detailed illustrations as well as illustrations of close relatives, and an identification key to the whole species group. By contrast, Eichler (1954) described *Anaticola chaetodens* in a footnote, with reference only to the dimensions of the head of a single examined male and an illustration and discussion of a single head seta. Both names are nomenclaturally available and need to be considered by researchers working with lice from their respective hosts. However, whereas any researcher can identify *F. josephi* from its original description, *A. chaetodens* can only be identified by direct comparison with the holotype. Females of *A. chaetodens* are impossible to identify.

The amount and usefulness of detail in descriptions and illustrations naturally vary even among the publications of the same author, and the examples above may be considered extremes on a spectrum. However, the lack of detail is a symptom of a view of louse taxonomy and classification in which the host associations are considered paramount for identification. If it is assumed axiomatically that different host species are parasitized by different louse species, and thus that host association is the only character that is truly needed, further details are superfluous, and characters are mentioned only to make names formally available.

Above all, adherents of Fahrenholz's rule often placed great value in the exact outline of certain characters, especially of the head. In some cases, only setae of a single area are illustrated, with no morphological context such as placement in relation to other characters, size or shape of the setae. Often, outlines of different characters may be combined (e.g., Złotorzycka 1970; Złotorzycka & Lucińska 1976; Fedorenko 1979, 1984), given slightly more detail (e.g., Eichler 1953), or be supplemented by poor-quality photographs that at least give a feeling for the general habitus (e.g., Balát 1981*a–b*). However, there are also numerous taxa that are illustrated solely by outlines or setae of a single individual: e.g., *Goniodes tibetanus* (Eichler 1950): outline of ventral process of female terminalia only; *Sturnidoecus melodicus* (Eichler 1951*c*): outline of head and dorsal anterior plate only; *Pseudomenopon insolens frescai* Eichler 1952*c*: lateral setae of female sternite IV on one side only; *Menacanthus wegelini* Eichler 1953: outline of single ventral spinous head process. In Złotorzycka's 'green book' monographs (Złotorzycka 1972*a–b*, 1976, 1977, 1980), almost all illustrations that have useful details are copied from other authors. As the accompanying text descriptions for most of the species dealt with in these publications are poor and refer to general characters, identification of these species is generally impossible without reference to type specimens. Moreover, few have subsequently been revised and illustrated in sufficient detail to be identifiable (e.g., Sychra *et al.* 2008; Gustafsson *et al*. 2019*a*).

Illustrations of species are by necessity always based on a small number of specimens (ideally at least one male and one female), and individual variation in specific characters is not always made explicit (but see, e.g., Price 1975: fig. 7–8). No species can be reproduced perfectly, and the illustrator therefore must decide what to include, and what to exclude. Unless there is evidence to the contrary accompanying the illustration, excluded characters must be assumed to be unimportant for the identification of the species. The reverse is not true, as unimportant details may be included for completeness or for aesthetic reasons.

Given identical text descriptions, there is, in our opinion, an inverse relationship between the level of abstraction and detail in the illustrations, and the implied variability of the species illustrated: as the number of illustrated characters decreases, the exactness of those included implicitly increases. If only one character is illustrated, the implication is that this character is sufficient to separate the

species from all congeners. This character therefore cannot be variable, or it would not serve to identify the species. If this character is different in a new sample, then the logical assumption is that they represent different species. In contrast, highly detailed illustrations paradoxically allow for more intraspecific variation. Dissimilarities in single characters between illustrations and fresh specimens will be diluted by similarities in other characters, and differences are more easily ascribed to individual or population-level variation. This is especially the case when illustrations are augmented by other data such as setal counts or discussions about known variation within the species.

The complete focus on single characters or character sets is also behind other infamous examples of poor louse taxonomy, such as the description of *Prunellides* Złotorzycka & Eichler, 1984. A re-examination of the holotype by Mey (2004*a*) revealed that the "peculiarities" of the head in this genus were due to poor mounting, and that *Prunellides* is a synonym of *Philopterus*. Moreover, many of the characters stated to be absent are actually present. As this is apparently obvious in the holotype (Mey 2004*a*: 164; holotype not seen by us), this raises questions about what Złotorzycka & Eichler (1984) actually examined. Similar descriptions of new taxa based on small amounts of characters, often in poorly prepared specimens, plague taxonomy, and invariably create extra work for subsequent researchers (e.g., Platnick *et al.* 2013; Jałoszynski 2015; Kaila 2015). However, the case of *Prunellides* is special, as this became a standard example of evolution in chewing lice for Eichler (e.g., Eichler 1985, 1987, 1990).

Moreover, it is not clear how deep researchers are expected to look to find sufficient characters that will tell apart two purported species from different hosts. Mey (2007: 93) suggested that a single consistent morphological difference between two louse populations on different hosts should suffice to separate them as different hospito-subspecies. In practice, the number and quality of accepted differences may be slight. For instance, the original description of *Rostrinirmus rostratus* Mey, 1982 was based on a single female, which differed from its suggested closest relative, parasitizing a different host species, in the shape of a section of the female subgenital plate. Gustafsson & Bush (2017), having examined a larger series of specimens from both host species, found that this character may vary between sides of the same specimen, and is thus useless as a species character.

The size of lice

Eichler & Złotorzycka (1971) and Eichler (1980*a*) highlighted that size differences are acceptable as characters that separate different species, following Harrison's rule (see above). During the 20th century, louse body size became one of the standard characters included in descriptions by adherents of the Eichlerian methodology, to fulfill the *Code* criteria formally for availability of a name. Often, measurements of the head (head index) were used as shorthand for the overall size of the lice. However, to our knowledge, no clear criteria for the minimum size difference between two species were ever published, nor criteria for how many specimens must be measured for this to be relevant, and whether size differences in only one sex are sufficient.

Head indices are variable and may overlap, depending on how many specimens are examined (Timmermann 1971: 171). In Appendix 4, we list the head lengths, head widths, and head indices of three *Brueelia*-complex lice known from more than one host species. In Appendix 5, we compare the head dimensions and indices of the different taxa of *Anatoecus* Cummings, 1916 treated by Złotorzycka (1970). In both comparisons, measurements and head indices from densely sampled populations overlap extensively or completely with those from sparsely sampled populations. For example, the head indices of specimens of *Acronirmus* Eichler 1953 from *Cecropis abyssinica* (Guérin-Méneville, 1843) and *Cecropis daurica erythropygia* (Sykes, 1832), seen in isolation, indicate that they are different species. However, these measurements fall within the variation of the *Acronirmus*

of *Hirundo rustica* Linnaeus, 1758 and *Delichon urbicum* (Linnaeus, 1758), which are conspecific (Gustafsson & Bush 2017). In Złotorzycka's (1970) *Anatoecus* data, the overlap in head indices is small between specimens from ducks and specimens from geese and swans, respectively, perhaps reflecting the phylogenetic distances found by *Anatoecus* specimens from these host groups by Grossi *et al*. (2014). However, within each of these two host groups, the overlaps are extensive.

As the number of specimens measured increases, the utility of the head index as a character to separate closely related louse populations may decrease. This is especially important, given that many louse taxa described by adherents of Fahrenholz's rule were based on very small sample sizes (e.g., Złotorzycka 1968*b*, 1970; Eichler & Vasjukova 1980). The intraspecific variation is thus unknown, even if measurements seem to be non-overlapping when individual specimens are compared. Incidentally, similar techniques of comparing exact outlines of single characters have resulted in highly inflated and likely erroneous species counts in other groups of animals (e.g., Reischütz 1994; Graf 2007). These superficial methods cannot be recommended regardless of the taxon involved.

Eichler (1970*c*) criticized Rheinwald (1968) for not considering as separate subspecies, populations of lice occurring on different host species that have slightly different measurements. This should be done, Eichler (1967) argued, to make it clear that these populations live on different hosts. For the same reason, Eichler (1967) welcomed the quadrinominal nomenclature proposed by Timmermann (1949) to give names to almost indistinguishable populations living on different host species. Timmermann (1951) himself soon abandoned this system, citing specifically the monstrosity that would have been "*Saemundssonia* (*Saemundssonia*) *scolopacisphaeopodis scolopacisphaeopodis scolopacisphaeopodis* (Schrank 1803)".

Moreover, differences in body size may evolve rapidly (Villa *et al*. 2019). Variation in body size may also vary within populations of lice on the same host species, and may be related to the abundance of lice (Lonc 1985; Lonc *et al* 1992; Tryjanowski *et al*. 2007, 2009). Gustafsson & Bush (2017) suggested that head size may differ between southern and northern populations of the same species, even if all other morphological characters are identical. Lice that differ in measurements (both absolutely and relatively) may thus be conspecific. In general, large series of lice are needed to confirm identification of specimens based on measurements, and even then the null hypothesis should be that louse populations that are indistinguishable apart from measurements should provisionally be considered conspecific. This is especially the case if only some measurements are compared, and others are ignored.

Circularity and contradiction: flamingoes and their lice

Setting aside the multitude of data that contradict Fahrenholz's rule and the Eichlerian methodology, a more basic problem is its inherent and inevitable circular reasoning. The observation that ***some*** lice are host specific led to the assertion that ***all*** lice are host specific. The observation that ***some*** lice are restricted to certain host groups, and thus presumably have tracked their evolution, led to the assertion that ***all*** lice have done so. Then, a close examination would always reveal variation among specimens from different hosts (especially if only small sample sizes were examined), and this was taken as evidence that these specimens represented different species. These were then described, and the resulting distribution of host associations became evidence that the method was correct.

Moreover, there is an inherent contradiction when lice are used to show that two host taxa are closely related, but at the same time different louse groups are assumed to parasitize different host groups. If louse groups *a* and *b* parasitize host groups A and B, respectively, and a researcher wants to show that A and B are closely related based on louse evidence, then they would put *a* and *b* in the

same genus. But if A and B are at the same time considered different orders, that would imply that *a* and *b* need to be different genera, as different host orders were generally assumed to be parasitized by different genera (e.g., Eichler & Złotorzycka 1971). This contradiction cannot easily be resolved (Fig. 5).

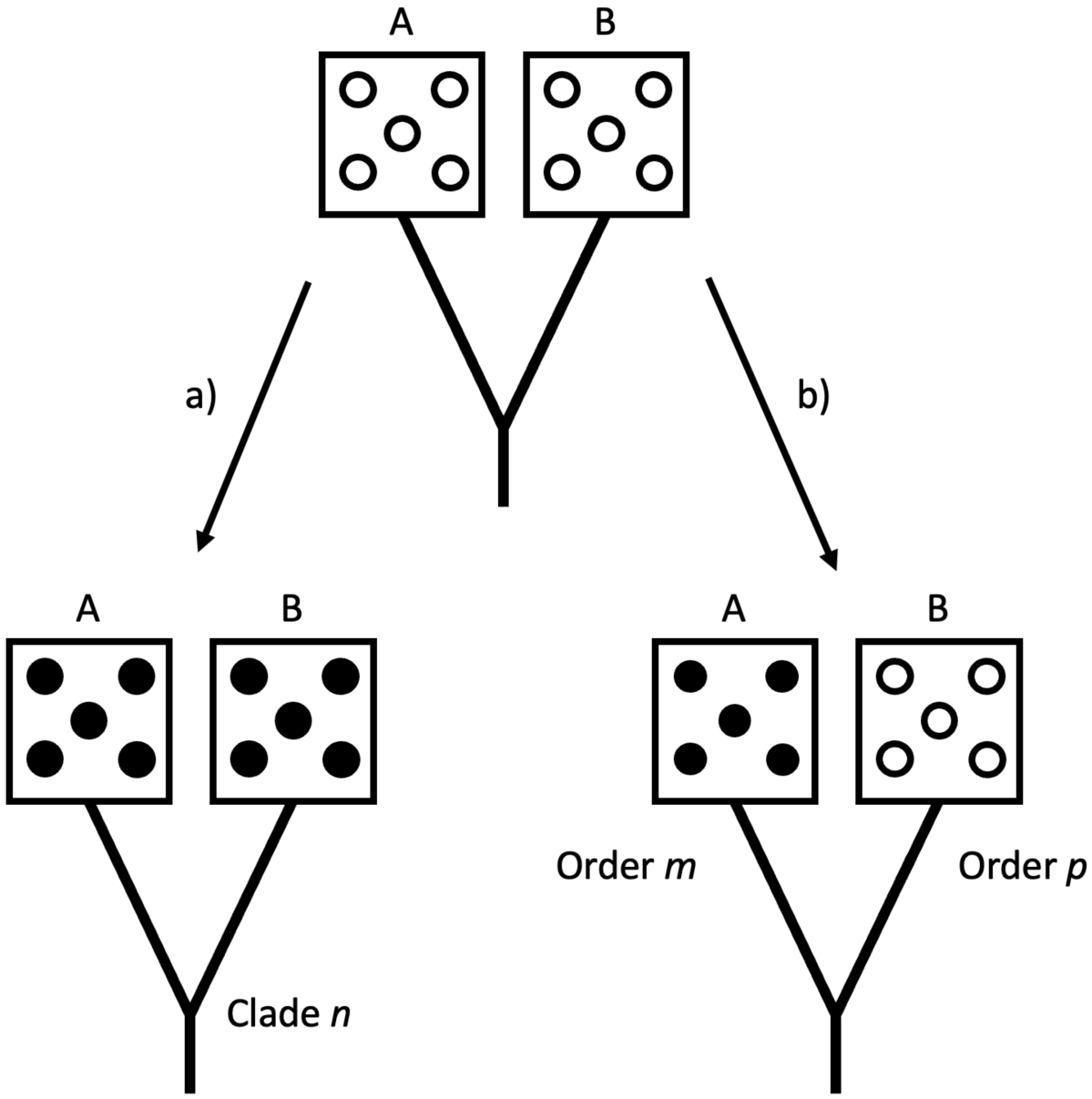

FIGURE 5. The contradiction inherent in using host associations to determine parasite taxon limits. Two closely related hosts (represented by boxes) are parasitized by some lice (represented by circles). Following Fahrenholz's rule, the genus-level classification of the lice can be determined in two ways. [a] Researchers who want to emphasize the close relationship between the host taxa, which are both parts of 'Clade *n*', can put the lice in the same genus. [b] Researchers who want to emphasize that the host taxa are in different orders (*m* and *p*), which are assumed not to have congeneric lice, can put the lice in different genera. These two classifications directly contradict each other, necessitating the repeat of this mechanism at a higher taxonomic level, e.g., tribe. In the example of flamingo lice (see text), Eichler initially followed arrow [a], considering, e.g., *Anatoecus* to show that flamingoes are closely related to ducks (Eichler 1948*b*). However, in later works (Eichler 1962), he followed arrow [b], to emphasize that these birds nevertheless belong to different orders. Eichler (1962) erected the subfamily *ANATOECINAE* to get around this contradiction. The later emphasis on *Anaticola* on flamingoes being a special species group may represent the early stages of switching from [a] to [b] in this genus as well.

A classic example that illustrates this dilemma is the lice of flamingoes. Hopkins (1942), possibly independently of Eichler (1939), noted that ornithologists at the time were uncertain about what the closest relatives of flamingoes were: storks (including herons) or ducks and allies. Hoping to solve this dilemma, Hopkins examined the lice of flamingoes and found that all four genera known from flamingoes were also found on ducks, but storks and flamingoes only share one louse genus. He regarded "this very close correspondence between the parasites of Flamingos and Ducks as complete proof that the Flamingos are Anseriformes […]. Their resemblance to Storks are misleading and are due to convergence".

Flamingo lice became a standard example for showing the utility of parasitological evidence for solving problems in bird classification (Eichler 1946, 1948*b*, 1958, 1962, 1963, 1973, 1990; Clay 1949, 1962, 1974*a*; Timmermann 1957, 1965; Černý 1972; Eichler & Vasjukova 1980, 1981; Rózsa 1991, 1993; Mauersberger & Mey 1993; Johnson *et al.* 2006; Mey 2009). However, as flamingoes were classified as a separate order from ducks, the Eichlerian methodology indicated that the lice on the two orders need to be placed in separate genera (Appendix 6). This division happened gradually and stands in stark contrast to the more conservative classification advocated by Hopkins & Clay (1952) and Price *et al*. (2003). Hopkins (1942) had considered all the lice shared between flamingoes and ducks to belong to only four genera, but by the 1980s, the only genus shared by both groups was *Anaticola* Clay, 1936. However, Eichler (1973) and Eichler & Vasjukova (1980) stressed that the lice in the genus *Anaticola* on flamingoes are a special group, and noted that the lice on flamingoes may need to be split into a separate subgenus in the future (Eichler & Vasjukova 1980: 355).

Thus, over time the generic placement of flamingo and duck lice diverged, in concordance with the assumption that louse genera are restricted to single host orders, and that even if only small morphological differences can be found, host associations should dictate the generic classification of lice (Eichler & Złotorzycka 1971). Eichler (1962: 290–291) even argued that this was a strength of the system, as keeping the lice on ducks and flamingoes congeneric may give rise to the suspicion that the lice on flamingoes were the result of "secondary acquisition", and not evidence for a close evolutionary relationship between their hosts.

Instead, close relationships between louse genera were expressed on the family level, not least through the extensive classification proposed by Eichler (1963). Expressing the connection between *Flamingobius* Kéler, 1960 (on flamingoes) and *Anatoecus* (on ducks) was the explicit reason Eichler (1962) erected the subfamily *Anatoecinae*. However, it is doubtful whether this was a useful solution, as Eichler's families include genera from different host groups, all of which are thus implied to be closely related. For instance, *Anseriphilus* Eichler, 1944*b* (on ducks) is placed in the same subfamily as *Ciconiphilus* Bedford, 1939 (on storks), but in a different subfamily than *Scalarisoma* Kéler, 1939 (on flamingoes). Similarly, *Anaticola* (on ducks and flamingoes) is placed in the same subfamily as *Ardeicola* Clay, 1936, *Ardeiphagus* Carriker, 1949, *Ibidoecus* Cummings, 1916 and *Neophilopterus* Cummings, 1916 (all on storks and herons). If the systematics of flamingo lice is supposed to reflect the phylogenetic relationships of the hosts, this classification can thus no longer be used to assert that flamingoes are more closely related to ducks than to storks and herons.

More recent studies show that flamingoes and ducks are not closely related and share few morphological characteristics (Olson & Feduccia 1980). This was disputed by Mey (2009) on parasitological grounds. Parasite-independent data have shown that the closest extant relatives of flamingoes are grebes (Tuinen *et al*. 2001; Mayr 2004), with which flamingoes share no genera of lice (Price *et al*. 2003). Thus, the problem with overreliance on using relationships within one taxon to determine relationships within the other goes both ways.

However, in an unexpected twist, phylogenetic data from a wider sampling of lice showed that Fahrenholz's rule may be correct: lice in the genera *Aquanirmus* Clay & Meinertzhagen, 1939 (on grebes) and *Anaticola* are closely related (Johnson *et al*. 2006). The ancestor of grebes and flamingoes

may thus have been parasitized by the ancestor of the lice that live on these birds today, which at some point switched host from flamingoes to ducks as previously suggested by Olson & Feduccia (1980) and Rózsa (1991). No such relationship had previously been suggested. Edwards (1965) considered *Aquanirmus* "unusually conservative", and Eichler (1963: 176) placed it in its own subfamily, as "no closer relationships with any other Mallophagan genus are known".

The changes in flamingo louse classification over the 20th century thus perfectly illustrate both the inherent contradictions and the inevitable circularity of the Eichlerian methodology: [1] similarities between lice on different host groups are used to argue that these hosts are closely related; [2] the resulting classification of the hosts is used to argue that the methodology is sound; [3] dissimilarities between lice on the different host groups are then emphasized to erect different genus-level louse taxa following host group divisions; [4] as this would contradict the close relationship of the hosts, still higher taxa are created to contain different genus-level louse taxa on the two host groups, to show that they are closely related; [5] this is again used to prove the soundness of the method. This is the essence of the Eichlerian methodology, and traces of it can be found throughout the 20th-century classification of the **PHTHIRAPTERA**.

The strictness of strictness

In an attempt to answer the critics of Fahrenholz's rule, Mey (1999) pointed out that most of them "overlooked the fact that [these hypotheses] do not claim to be absolute and universal; they cannot be applied automatically in every case". This echoes Eichler (1990), who considered the criticism of Lyal (1986) to be based on precisely this misunderstanding: the definition Lyal uses for Fahrenholz's rule is too strict, and the ***true*** Fahrenholz's rule is more similar to what Lyal called "Clay's rule" ["closely related hosts tend to have closely related lice"; derived from Clay (1949)]. Mauersberger & Mey (1993: 7) also stated that "of course no mallophagologist has championed such a strict form of [the idea that louse relationships can predict host relationships]".

If true, this would mean that the preceding discussion is superfluous and quixotic. If Eichler and his coauthors never argued that this methodology was "absolute and universal", the many examples given here do not in fact contradict it; they would "disturb but not negate" (Mauersberger & Mey 1993: 7). How strictly did Eichler and his coauthors and followers apply the idea that host specificity and Fahrenholz's rule are strictly applied?

A close reading of Eichler's various publications shows that Mey's claim is technically correct. In many publications discussing Fahrenholz's rule or the coevolution of lice and hosts, Eichler admits that there are cases where the rule does not apply and does not state that this is an "absolute and universal" rule. However, Eichler (1990), Mey (1999) and Mauerberger & Mey (1993) overlook several circumstances that render this answer to Eichler's critics hollow.

First, as detailed above, Fahrenholz's rule and the Eichlerian methodology evolved over the nearly 50 years between the first formal definition of Fahrenholz's rule (Eichler 1942) and the last manuscript he published on the topic (Eichler 1990). Moreover, Eichler (1990) attempted to distract the reader by referring to his less formal 1940 formulation of Fahrenholz's rule, rather than his more formal 1942 formulation. The former is indeed essentially the same as "Clay's rule", whereas the latter is not, but it is the latter that formed the basis of all subsequent hypotheses and methodology. Species and genus level taxa have been split and described precisely because preconceived ideas of host relationships dictated this. This would not happen under the 'milder' Fahrenholz's (or Clay's) rule but is symptomatic of the stricter Fahrenholz's rule. If closely related hosts simply tended to have closely related lice, and the co-phylogenetic patterns outlined by, e.g., Eichler (1942), were not

strictly applied, there would be no reason to assume strict host specificity, and thus no need for the erection of countless taxa based on this hypothesis (see below).

Secondly, almost invariably Eichler's admissions that there are exceptions to his methodology are combined, sometimes in the same paragraph, by assertions that these exceptions are not, in fact, exceptions. A typical caveat takes the form that a more detailed analysis would find differences between specimens from different hosts that would allow for their separation into different, host-specific taxa (species or subspecies). For instance, whereas Eichler (1980*a*: 412) cautioned that we should not "exaggerate" and consider all populations from different hosts as different species "at any price", he quickly fell back on a reformulation of his "corollary" (see above), stating that "a future review may nevertheless prove that there are morphological differences" (1980*a*: 412). Similarly, Eichler & Vasjukova (1981: 26) first suggested that *Trinoton* may be a case where host specificity may not be as strict, but then reversed this by stating that the use of hospito-subspecies was nevertheless useful.

Thirdly, Eichler ***explicitly*** stated in several different publications that specimens from different hosts should be described as separate taxa, even if there are few or no meaningful differences between these specimens (Eichler & Złotorzycka 1971), and even if these taxa can only be separated by statistical comparison between large series, and no character can be used to separate all specimens reliably (Eichler 1970*a*). The concept of "hospito-subspecies" was created for exactly this purpose. At the genus level, Eichler (1972) stated that it was expedient to use subgenera to separate lice on different host families when the morphological difference was not enough to separate them into genera (see the genera "*in statu nascendi*" of Złotorzycka 1967). Eichler (1970*a*) even preferred "smuggling in" potentially erroneous examples of host specificity to potentially erroneous examples of host generalism. In his last publication on the parasitophyletic rules, Eichler (1990: 25) called it an "error" to call lice collected from non-type hosts the same species.

Fourthly, the objection that Lyal (1986) treated Fahrenholz's ***rule*** as a ***law*** ("Regel" and "Gesetzes", respectively; Eichler 1990: 22) becomes confusing, when Eichler & Złotorzycka (1971: 30) called their ideas on host specificity—which are derived from a strict application of Fahrenholz's rule—"principles that should be used as a starting point". In practice, there is no difference between rule, law and principle in the Eichlerian methodology. This was taken to the extreme by Eichler (1985) who first doubted Odening's (1983) statement that Fahrenholz's rule may not be as generally applied as previously thought, then stated that the parasitophyletic laws are "real facts", and then ended his discussion by stating that these methods "(especially Fahrenholz's rule) are not only valuable and useful, but that they are an absolutely inevitable part of evolutionary research in parasitology" (Eichler 1985: 525).

Finally, in their multitude of publications, it becomes evident that ***in practice*** Eichler and his coauthors did not allow for deviations from Fahrenholz's rule. Lice occurring on different host species were invariably described as at least different (hospito)subspecies, and this is typically explicitly based on the relationships of the hosts. Examples of this are numerous, including:

[1] Złotorzycka (1964*c*: 262) separated *Brueelia cruciata* and *Brueelia fuscopleura* into different species despite being "very similar", "because their hosts belong to different families". Similarly, Złotorzycka (1964*c*: 266) separated *Turdinirmus daumae* from *Turdinirmus zootherae* because the hosts were (erroneously) stated to be in different genera.

[2] Eichler & Vasjukova (1980: 343) separated *Anaticola boetticheri* from *Anaticola rubromaculata* because the hosts belong to different subgenera. This was also their justification for keeping *Anaticola thoracicus* separate from *Anaticola tadornae* (1980: 358).

[3] Eichler & Vasjukova (1981: 26–27) stated that they had accepted subspecific status for *Trinoton* specimens from different host species when there were available names for them, even if "the probability that the observed differences are real was low". In cases where there was no available name, specimens were assumed to belong to some undescribed subspecies.

In these and similar cases, morphology is not even discussed, and in many cases Eichler and Złotorzycka did not even examine specimens; they made taxonomic decisions based on host data only. Appendix 7 compares the number of host generalists and host specialists in revisions and catalogs published by four authors between 1963–1990. In the 16 publications by Eichler and/or Złotorzycka we analyzed, a maximum of 3 species of 651 (0.5 %) were considered potential host generalists (with caveats; see Appendix 7). The corresponding number for Clay is 39 of 128 in 8 publications (30.5 %), and for Price 98 of 275 in 14 publications (35.6 %). Partially, this difference is due to the different groups of lice these authors studied. However, several genera were examined by both groups of authors (*Colpocephalum*, *Myrsidea*, *Strigiphilus* Mjöberg, 1910), with vastly different conclusions about host associations and host specificity. Notably, Bush *et al.* (2016) calculated that, depending on method, 17.7–44.7 % of the examined species in the *Brueelia*-complex are host generalists. These numbers are similar to the 30.5–35.6 % host generalists in the publications of Clay and Price, but very dissimilar to the 0–0.5 % host generalists in the publications of Eichler and Złotorzycka (Appendix 7).

A recurring theme in the publications by Złotorzycka listed in Appendix 7 is that specimens reported from non-type hosts are almost invariably assumed to be other, undescribed, species, typically without examination of any specimens. If all species of lice occurring on more than one host species are *a priori* assumed to consist of more than one species, host-louse associations will naturally be on a one-to-one basis. As no specimens were examined in most of these cases, and no argument for the separation is given apart from differences in host associations, it is natural to conclude that the taxonomy is based on a strict, universal and absolute application of Fahrenholz's rule.

Similarly, Eichler (1980*b*) and Eichler & Vasjukova (1981) stated their doubts that Clay (1963, 1976*a*) was correct in her treatment of *Trinoton* species parasitizing *Dendrocygna*. Clay considered each Old World host in this group to be parasitized by a separate species of *Trinoton*, whereas the *Trinoton* on New World whistling ducks were all considered conspecific. The fact that Clay did not use the concept of hospito-subspecies was used to raise the suspicion that maybe the *Trinoton* populations on different New World hosts may actually represent different subspecies of the same species. Eichler & Vasjukova (1981) could not confirm this, as no specimens of any *Trinoton* species from any *Dendrocygna* host were available to them. Nevertheless, if subspecies are defined based on which host species they occur on, then it is inevitable that different subspecies occur on different host species. This is precisely the circularity and dogmatic adherence to a strict application of Fahrenholz's rule for which Eichler was criticized.

The statements of Eichler (1990) and Mey (1999) that the critics of Fahrenholz's rule have simply misunderstood it, and that it was never meant to be strictly applied, are thus disingenuous as best. Exceptions were exactly that: exceptions, which would probably be found not to be exceptions when more data were analyzed, or if the concept of hospito-subspecies was utilized with diligence. The impression that these parasitophyletic rules (see above) should be regarded as inescapable laws of nature was established by Eichler himself, and does not derive from misinterpretations of his writings.

Unlike Mey, who was in regular contact with both Eichler and Złotorzycka during the last decades of their lives (Mey 1994*b*, 2004*b*, 2007), we never had the privilege to meet either of them. It is possible that the 'milder' version of Fahrenholz's rule was the version they intended to bequeath to the world. However, what they actually published, and what they actually used, was the 'stricter' version.

Flowers for Fahrenholz: present and future

Stated differently, the Eichlerian methodology is the proposition that characters of the lice can be considered an 'extended genome' of the hosts, and thus used in phylogenetic analyses of relationships among hosts. It is assumed that host-louse associations can only have evolved through vicariance, and host switching does not have any evolutionary significance, i.e., 'extended gene' transfer between non-conspecific hosts is impossible or unimportant. Instead, the presence of the same group of lice on two host groups can be considered a synapomorphic character to be included in analyses of the relatedness of the hosts. The lice themselves, from this viewpoint, are not distinct biological entities any more than a feather is a separate entity from the rest of the bird.

The absurdity of this viewpoint was pointed out succinctly by Nelson (1972): "According to their hypothesis the inclusion of two previously recognized host species as conspecific or the division of one species into two or more separate species would automatically synonymize or erect species of lice". This is an inescapable conclusion of the Eichlerian methodology, in which louse classification is a mere extension of host classification and host specificity is assumed to be strict. As a result of the innate circularity and the accumulated evidence that contradicts the Eichlerian methodology, Fahrenholz's rule has today been largely abandoned.

Today, the identity and classification of chewing lice is largely established by the morphology and chaetotaxy of the lice themselves, regardless of the host association, supplemented by DNA data when available (e.g., Price *et al.* 2008; Valim & Weckstein 2008; Sychra *et al*. 2014*b*; Gustafsson & Bush 2017; Kolencik *et al*. 2021). Moreover, the existence of conspecific louse populations on multiple host species is not controversial (e.g., Gustafsson & Bush 2017), and hospito-subspecies exist only as relics of the past in groups that have not been revised. Countless studies have shown that host specificity, while common, is not strict among lice, nor is there a general correspondence between the phylogeny of the host and that of the lice. Host switching is an established fact, both at lower levels (e.g., between closely related host species) and at higher levels (e.g., between hosts in different orders). Moreover, it is recognized that host switching may have contributed significantly to the overall patterns of louse-host associations seen today (de Moya *et al*. 2019).

Going forward, Fahrenholz's rule may still be useful as a null hypothesis to be tested. Despite the importance of host switching for the evolution of lice and development of host-association patterns, host switching does appear to have some limits. For instance, lice in the *Philoceanus*-complex on oceanic procellariiform hosts are all closely related, and no members of this complex are known from any forest-dwelling songbirds. All the known methods of host switching (see above) rely on relatively close proximity of hosts. The importance of host switching has a direct correlation with the overlap in range, habitat, and ecology between two hosts. In any specific case, there may be sound ecological reasons to assume that Fahrenholz's rule is applicable. However, researchers using Fahrenholz's rule as a basis for their research must be open to the idea that this rule is not flawless or absolute and may need to be rejected in a specific case.

Echoes from the past: Mey (2020, 2021)

Given this general shift away from the assumptions of strict coevolution and host specificity, it is disheartening to see one of the foremost and most knowledgeable living louse researchers echoing the Eichlerian methodology in recent publications. Mey (2020: 158–159) considered "the phenomenon of host specificity to be strictly observed" and criticized Najer *et al*. (2020*a*) for synonymizing louse taxa from different host species. Mey (2020) labeled host specificity a "basic principle", which "is carelessly abandoned when it is thought that there are too many exceptions in nature to convince us of its dubiousness or even the opposite". He exhorted us to remember that the "natural close relationship

[between lice and their hosts] leads to and/or has led to host specificity" and stated that "the subtle research of the animal louse taxonomist can only stand against this background, if that taxonomist strives for truthfulness in the elucidation of the biodiversity of these miniature creatures".

This is, at best, an outdated misrepresentation of the state of our knowledge on louse-host associations and phylogenetic patterns. It would be more accurate to state that virtually no data have ever been published, and then independently verified, that supports the universality of this "basic principle". Rather, a multitude of data sources from dozens of different research programs across the world over several decades all combine to falsify the central assumptions of Fahrenholz's rule, the Eichlerian methodology and Mey's "basic principle". Even if common, neither host specificity, nor coevolution, are "strictly observed".

Moreover, echoing the "corollary" of Eichler (1940; see above), Mey (2020: 158–159) stated that it "is easier to declare one (morpho-) species to be conspecific with an apparently different one than to search for relevant differences which show their independence". This implies that if Najer *et al*. (2020*a*) had just looked hard enough, they would have found relevant morphological differences that would justify treating louse populations from different warbler host species as different species. However, doing so would change the goal of louse taxonomy from identifying specimens based on similarities and differences with known species, to searching for characters on which to base the description of a new species, to fit the criteria of a preformed hypothesis assumed to be true. In that sense, the Eichlerian methodology is the reverse of science.

Similarly, Mey (2021: 402) stated that "[a]ny other non-anthropogenic secondary infestation that has become permanent over generations does not have the high evolutionary significance that is sometimes attributed to for example the phenomenon of phoresy in Phthiraptera" and that "there is no empirically based study that can convincingly demonstrate that rather ephemeral host change could seriously challenge the host specificity that has naturally evolved". Instead, this correlation is "like a rock in the surf", a statement which has allegedly "been further consolidated in recent years".

Rather than being ephemeral and non-permanent, host switches have in some cases been profound enough that lice have become established on distantly related hosts long enough to evolve into distinct groups of their own. How these host switches happened will likely forever remain unknown, but cases where lice have successfully switched from one host group to another are widely known (e.g., Johnson *et al*. 2011; Bush *et al*. 2016), and are uncontroversial. Recent research has not "consolidated" the outdated view that each host group "harbour a characteristic ensemble [...] unique to them" (Mey 2021: 402). This view has been eroded to the point of collapse, as outlined above.

For instance, Appendix 8 lists the known host associations of three species of *Guimaraesiella*, based on published genetic data (Bush *et al.* 2016; Light *et al*. 2016; Lee *et al.* 2022; Tian *et al*. 2022). Conceivably, all these host associations are the result of "non-anthropogenic secondary infestation" which "does not have [any] high evolutionary significance" as argued by Mey (2021). If so, at most one of the host associations of each louse taxon is correct, and all others are by necessity evolutionary dead ends, that can, at best, "disturb but not negate" Fahrenholz's rule (Mauersberger & Mey 1993: 7).

Alternatively, the three *Guimaraesiella* species in Appendix 8 represent taxa that are natural host generalists naturally capable of switching between hosts. Potentially, these species may have had long evolutionary histories of host switching, as suggested by the fact that many close relatives of these lice in the phylogeny of Bush *et al*. (2016) are also host generalists. At least species 1 and 2 have been found phoretically on hippoboscid flies (Lee *et al.* 2022). The relative similarity in body size among many of the hosts of each louse taxon, the close relationships between the hosts (e.g., *Muscicapidae* for *Guimaraesiella* sp. 1 and *Pycnonotidae* for *Guimaraesiella* sp. 3), and the fact that many of these host species are associated with mixed species flocks may have influenced the apparent establishment of the same louse species on multiple hosts.

As argued above, more data are needed on the mechanisms and importance of host switching, and the host characteristics that lice adapt to. However, no data have been published that indicate that conditions on different host species are so insurmountably different that host switching and the evolution of host generalism can be ruled out *a priori*, as Mey (2021) claimed. Whatever the original host of *Guimaraesiella* sp. 1 was, the assertion that observable transfers from this host to any of the hosts listed in Appendix 8 ***cannot possibly*** result in the successful establishment of a louse population on any other host is a hypothesis that requires careful testing, not the bedrock upon which modern louse research can be built. As it stands, there is presently no evidence for Mey's assertions.

Conclusions

Clay (1951*a*) stated that "unless there is good evidence to the contrary, genera must be based on morphological criteria and not on hypothetical speculations of their evolution based in distribution". Hopkins & Clay (1952) advocated the use of characters of the lice themselves for drawing limits between taxa: "we think that the primary considerations [for taxon limits] should be morphological and that distribution should only be used for the purposes of confirmation".

This methodology, expanded to include molecular data, would mean that some lice are strictly host-specific, some lice occur on a small number of related hosts, some lice occur on a small number of distantly related hosts, and some lice occur on a large number of hosts. Similarly, some groups of louse species have co-speciated with their hosts, and some have not. This may differ between genera, and even within genera. Provided species are illustrated properly, this method has the advantage of not requiring comparisons with type specimens for identification; moreover, it has the advantage of being supported by data.

This is important, as louse research is in the middle of a "misidentification crisis" (Bush *et al*. 2021). Identification of lice based on host relationships rather than a careful examination of their morphology is becoming a growing problem, and this is especially the case for the lice that may matter the most: those of economic importance to developing nations. Inasmuch as lice are an economically important problem, identification based on host associations could easily lead to misdiagnosis.

Alternatively, identification based on host association may cause cases of new lice spreading on domestic birds to go unrecognized. Even in cases such as domestic chicken, arguably one of the best-studied birds in the world, some louse taxa are only known locally (Fabiyi 1972), whereas others may be absent from certain areas (Fabiyi 1986, 1996; Gustafsson & Zou 2020*b*). Two louse species have been described from domestic chicken in recent years (Naz & Rizvi 2016; Alahmed *et al.* 2017), although it is presently uncertain whether these species are commonly found on chicken, or represent recent, local colonization on chicken from unknown hosts. The possibilities that these species are contaminants, stragglers, or transient colonies that will be outcompeted by more common lice on domestic chicken also need to be considered. Such data are invaluable for our understanding of the evolution of host associations and the environmental factors that govern the geographic distribution of lice. Collection of this kind of data becomes much harder if host associations are used for species identification and delimitation.

Moreover, replication of published research is sometimes impossible due to poor taxonomic information in non-taxonomic publications (Packer *et al.* 2018; Monckton *et al*. 2020), a trend that would not be helped by replacing taxonomic revisions with references to host associations. Louse taxonomy has largely been spared from what is currently termed "taxonomic vandalism" (e.g., Jäch 2006; Anonymous 2007; Bolton *et al.* 2008; Kaiser *et al.* 2013; Páll-Gergely *et al.* 2020; Wüster *et al*. 2021). However, a revived interest in delimiting louse taxa based on host associations, under the mistaken belief that host specificity is "strictly observed", could open the door to a morass of

undesirable and misleading work. For instance, investigations of louse biogeography and the factors that limit or facilitate geographical distribution could be severely hampered if lice are identified based on host associations since the ranges of individual louse species are thereby artificially inflated.

The arguments outlined here are thus not only of taxonomic interest, but concern anyone who has occasion to identify lice. Suggestions that host specificity is strictly observed, and thus that host identity at least goes a long way to establishing louse identity, may have unforeseen downstream effects. We therefore strongly advocate that future louse researchers focus on revealing the evolutionary history and classification of lice from the morphological and molecular data the lice themselves provide. To paraphrase Hopkins (1949*b*): correct identification of lice is (or should be) a very simple process, though it is certainly more tedious than making incorrect identifications. The principles and methodology outlined by Mey (2020) are the same as those advocated by Eichler and Złotorzycka during the second half of the 20th century. At that time, when data were limited and based almost exclusively on the morphology of a limited number of species, these ideas were understandable. However, as shown above, the Eichlerian methodology inevitably leads to circular reasoning and is contradicted by large amounts of data published over the last 40-odd years.

We hope to have shown that while co-speciation happens and host specificity is common among lice, exceptions are definitely "too many […] in nature" (Mey 2020) to prevent us from assuming that co-speciation and host specificity are always strictly followed. Moreover, the practice of identifying and describing lice based on host associations is an invalid methodology, which does nothing to aid our understanding of louse ecology, classification and evolution. Species limits, species relationships and classification, and host specificity and associations need to be assessed on a case-to-case basis for each species or population of chewing lice, using reliable data derived from the lice themselves rather than theory.

It is time to close the book on Fahrenholz's rule.

Acknowledgements

This research was funded by grant GIABR-GJRC201701 from the Introduction of Full-Time High-Level Talent Fund of the Institute of Zoology, Guangdong Academy of Sciences, grant 31961123003 from the National Natural Science Foundation of China, grant QN20200130012 of the Foreign Young Talent Plan and grant 2019QN01N968 from the Pearl River Talent Recruitment Program of Guangdong Province. These agencies had no influence on the design or execution of this study. We thank Pawel Jałoszynski (Museum of Natural History, University of Wrocław, Poland) for providing us with copies of some of Eichler's publications, access to type material of lice described by Złotorzycka, and a discussion on similar topics in other groups of insects.

References

Anonymous [International Commission on Zoological Nomenclature] (1999) *International code of zoological nomenclature*. 'Fourth edition'. London (International Trust for zoological Nomenclature): i–xxix +1–306.

Anonymous [The Editors] (2007) Vandalism in taxonomy. *Koleopterologische Rundschau*, **77**: 38.

Adams, R. J., Price, R. D. & Clayton, D.H. (2005) Taxonomic revision of Old World members of the feather louse genus *Columbicola* (Phthiraptera: Ischnocera), including descriptions of eight new species. *Journal of natural History*, **39**: 3545–3618. <https://doi.org/10.1080/00222930500393368>.

Agarwal, G. P. (1967) Studies on the bionomics and life-history of *Falcolipeurus frater* (Giebel, 1874) (Mallophaga: Ischrocera *[sic]*). *Indian Journal of Zoology*, **8**: 21–40.

Alahmed, A., Aldryhim, Y., Shobrak, M & Nasser, M. (2017) A new species of the genus *Amyrsidea* (Phthiraptera: Amblycera: Menoponidae) parasitizing domestic chickens in Saudi Arabia. *Zootaxa*, **4238**: 253–257. <https://doi.org/10.11646/zootaxa.4238.2.5>.

Balát, F. (1981*a*) New species of biting lice (Mallophaga) of the genera *Penenirmus* and *Rostrinirmus*. *Folia parasitologica (Praha)*, **28**: 161–168.

Balát, F. (1981*b*) A contribution to the knowledge of biting lice (Mallophaga) found on passerines (Passeriformes). *Folia parasitologica (Praha)*, **28**: 273–282.

Balát, F. (1982) Zwei neue Federlinge (Mallophaga) aus Serrahn. *Zoologischer Rundbrief Neubrandenburg*, **2**: 43–47.

Banks, J. C., Palma, R. L. & Paterson, A. M. (2006) Cophylogenetic relationships between penguins and their chewing lice. *Journal of evolutionary Biology*, **19**: 156–166. <https://doi.org/10.1111/j.1420-9101.2005.00983.x>.

Barrientos, R., Valera, F., Barbosa, A., Carillo, C. M. & Moreno, E. (2014) Biogeography of haemo- and ectoparasites of an arid-land bird, the trumpeter finch. *Journal of arid Environments*, **106**: 11–17. <https://doi.org/10.1016/j.jaridenv.2014.03.005>.

Bartlow, A. W., Villa, S. M., Thompson. M. W. & Bush, S. E. (2016) Walk or ride? Phoretic behaviour of amblyceran and ischnoceran lice. *International Journal for Parasitology*, **46**: 221–227. <https://doi.org/10.1016/j.ijpara.2016.01.003>.

Bedford, G. A. H. (1939) Notes on Menoponidae (Mallophaga) with descriptions of new genera and species. *Onderstepoort Journal of veterinary Science and animal Industry,* **12**: 121–152.

Blagoveshtchensky, D. I. (1940) Mallophaga from birds of the Talysh lowlands. *Magasin de Parasitologie et l'Institut zoologique de l'Académie des Sciences de l'URSS*, **8**: 25–90.

Blagoveshtchensky, D. I. (1951) Mallophaga of Tadzhikistan. *Parazitologieeskij Zbornik*, **13**: 272–327.

Block, N. L., Goodman, S. M., Hackett, S. J., Bates, J. M. & Raherilalao, M. J. (2015) Potential merger of ancient lineages in a passerine bird discovered based on evidence from host-specific ectoparasites. *Ecology and Evolution*, **5**: 3743–3755. <https://doi.org/10.1002/ece3.1639>.

Bolton, B., Sosa-Calvo, J., Fernandez, F. & Lattke, J.E. (2008) New synonyms in neotropical myrmecine ants (Hymenoptera: Formicidae). *Zootaxa*, **1732**: 61–64. <https://doi.org/10.11646/zootaxa.1732.1.5>.

Boyd, B. M., Allen, J. M., Koga, R., Fukatsu, T., Sweet, A. D., Johnson, K. P. & Reed, D. L. (2016) Two bacterial genera, *Sodalis* and *Rickettsia*, associated with the seal louse *Proechinophthirus fluctus* (Phthiraptera: Anoplura). *Applied and environmental Microbiology*, **82**: 3185–3197. <https://doi.org/10.1128/AEM.00282-16>.

Brooke, M. de L. & Nakamura, H. (1998) The acquisition of host-specific feather lice by common cuckoos (*Cuculus canorus*). *Journal of Zoology*, London, **244**: 167–173. <https://doi.org/10.1111/j.1469-7998.1998.tb00022.x>.

Bueter, C., Weckstein, J., Johnson, K. P., Bates, J. M. & Gordon, C. E. (2009) Comparative phylogenetic histories of two louse genera found on *Catharus* thrushes and other birds. *Journal of Parasitology*, **95**: 295–307. <https://doi.org/10.1645/GE-1642.1>.

Bulgarella, M., Quenu, M., Shepherd, L. D. & Morgan-Richards, M. (2018) The ectoparasites of hybrid ducks in New Zealand (Mallard × Grey Ducks). *International Journal for Parasitology: Parasites and Wildlife*, **7**: 335–342. <https://doi.org/10.1016/j.ijppaw.2018.09.005>.

Burmeister, K. H. K. (1838) Mallophaga Nitzsch. *In*: *Handbuch der Entomologie*, Zweiter Band, *Besondere Entomologie*, Zweite Abteilung, *Lauskerfe, Gymnognatha*, (Zweiter Hälfte; *vulgo Neuroptera*), Berlin (Theodor Christian Friedrich Enslin): 1–293.

Bush, S. E. (2009) Does behavioural flexibility facilitate host switching by parasites? *Functional Ecology*, **23**: 578–586. <https://doi.org/10.1111/j.1365-2435.2008.01535.x>.

Bush, S. E. & Clayton, D. H. (2006) The role of body size in host specificity: reciprocal transfer experiments with feather lice. *Evolution*, **60**: 2158–2167. <https://doi.org/10.1111/j.0014-3820.2006.tb01853.x>.

Bush, S. E. & Clayton, D. H. (2018) Anti-parasite behaviour of birds. *Philosophical Transactions of the royal Society*, (B), **373** [20170196]: [1–13]. <https://doi.org/10.1098/rstb.2017.0196>.

Bush, S. E., Gustafsson, D. R., Tkach, V. V. & Clayton, D. H. (2021) A misidentification crisis plagues specimen-based research: a case for guidelines with a recent example (Ali et al., 2020). *Journal of Parasitology*, **107**: 262–266. <https://doi.org/10.1645/21-4>.

Bush, S. E., Harbison, C. W., Slager, D. L., Peterson, A. T., Price, R. D. & Clayton, D. H. (2009) Geographic variation in the community structure of lice on Western scrub-jays. *Journal of Parasitology*, **95**: 10–13. <https://doi.org/10.1645/GE-1591.1>.

Bush, S. E., Kim, D., Moyer, B. M., Lever, J. & Clayton, D. H. (2006*b*) Is melanin a defense against feather-feeding lice? *Auk*, **123**: 153–161. <https://doi.org/10.1093/auk/123.1.153>.

Bush, S. E., Kim, D., Reed, M. & Clayton, D. H. (2010) Evolution of cryptic coloration in ectoparasites. *American Naturalist*, **176**: 529–535. <https://doi.org/10.1086/656269>.

Bush, S. E. & Malenke, J. R. (2008) Host defence mediates interspecific competition in ectoparasites. *Journal of animal Ecology*, **77**: 558–564. <https://doi.org/10.1111/j.1365-2656.2007.01353.x>.

Bush, S. E., Reed, M. & Maher, S. (2013) Impact of forest size on parasite biodiversity: implications for conservation of hosts and parasites. *Biodiversity and Conservation*, **22**: 1391–1404. <https://doi.org/10.1007/s10531-013-0480-x>.

Bush, S. E., Sohn, E. & Clayton, D. H. (2006*a*) Ecomorphology of parasite attachment: experiments with feather lice. *Journal of Parasitology*, **92**: 25–31. <https://doi.org/10.1645/GE-612R.1>.

Bush, S. E., Villa, S. M., Altuna, J. C., Johnson, K. P., Shapiro, M. D. & Clayton, D. H. (2019) Host defense triggers rapid adaptive radiation in experimentally evolving parasites. *Evolution Letters*, **3**: 120–128. <https://doi.org/10.1002/evl3.104>.

Bush, S. E., Weckstein, J. D., Gustafsson, D. R., Allen, J., DiBlasi, E., Shreve, S. M., Boldt, R., Skeen, H. R. & Johnson, K. P. (2016) Unlocking the black box of feather louse diversity: a molecular phylogeny of the hyper-diverse genus *Brueelia*. *Molecular Phylogenetics and Evolution*, **94**: 737–751. <https://doi.org/10.1016/j.ympev.2015.09.015>.

Carillo, C. M., Valera, F., Barbosa, A. & Moreno, E. (2007) Thriving in an arid environment: high prevalence of avian lice in low humidity conditions. *Écoscience*, **14**: 241–249. <https://doi.org/10.2980/1195-6860(2007)14[241:TIAAEH]2.0.CO;2>.

Carriker, M. A., Jr. (1949) Neotropical Mallophaga Miscellany. V. New genera and species. *Revista brasileira de Biologia*, **9**: 297–313.

Catanach, T. A. & Johnson, K. P. (2015) Independent origins of the feather lice (Insecta: *Degeeriella*) of raptors. *Biological Journal of the Linnean Society*, **114**: 837–857. <https://doi.org/10.1111/bij.12453>.

Catanach, T. A., Johnson, K. P., Marks, B. D., Moyle, R. G., Valim, M. P. & Weckstein, J. D. (2019) Two lineages of kingfisher lice exhibit differing degrees of cospeciation with their hosts. *Parasitology*, **146**: 1083–1095. <https://doi.org/10.1017/S0031182019000453>.

Catanach, T. A., Valim, M. P., Weckstein, J. D. & Johnson, K. P. (2017) Cophylogenetic analysis of lice in the *Colpocephalum* complex (Phthiraptera: Amblycera). *Zoologica scripta*, **47**: 72–83. <https://doi.org/10.1111/zsc.12262>.

Černý, V. (1972) Comparison of chewing lice and feather mites as indicators of relationships in some birds suborders. *Wiadomości Parazytologiczne*, **18**: 525–529.

Choudhury, A., Moore, B. R. & Marques, F. L. (2000) Vernon Kellogg, host switching, and cospeciation: rescuing straggling ideas. *Journal of Parasitology*, **88**: 1045–1048. <https://doi.org/10.1645/0022-3395(2002)088[1045:VKHSAC]2.0.CO;2>.

Cicchino, A. C. & González-Acuña, D. A. (2012) Species in the genus *Bonomiella* Conci, 1942 (Phthiraptera: Menoponidae) from Argentina and Chile. *Zootaxa*, **3427**: 47–56. <https://doi.org/10.11646/zootaxa.3427.1.4>.

Clay, T. (1936) Two new genera of Mallophaga. *Proceedings of the zoological Society of London*, **1935**: 615–618. <https://doi.org/10.1111/j.1096-3642.1935.tb01684.x>.

Clay, T. (1946) The Mallophagan parasites of the Passeriformes. *Ibis*, **88**: 403–405.

Clay, T. (1947) The systematic position of the Musophagi as indicated by their Mallophagan parasites. *Ibis*, **89**: 654–656. <https://doi.org/10.1111/j.1474-919X.1947.tb03899.x>.

Clay, T. (1949) Some problems in the evolution of a group of ectoparasites. *Evolution*, **3**: 279–299. <https://doi.org/10.1111/j.1558-5646.1949.tb00030.x>.

Clay, T. (1950*a*) A preliminary survey of the distribution of the Mallophaga ('feather lice') on the class Aves (birds). *Journal of the Bombay natural History Society*, **49**: 430–443.

Clay, T. (1950*b*) The Mallophaga as an aid to the classification of birds with special reference to the structure of feathers. *Proceedings of the Xth Ornithological Congress*, *Uppsala June 1950*: 207–215.

Clay, T. (1951*a*) An introduction to the classification of the avian Ischnocera (Mallophaga). Part I. *Transactions of the royal entomological Society of London*, **102**: 171–194, 1 pl. <https://doi.org/10.1111/j.1365-2311.1951.tb00746.x>.

Clay, T. (1951*b*) The Mallophaga and relationships within the Falconiformes. *Ibis*, **93**: 628. <https://doi.org/10.1111/j.1474-919X.1951.tb05468.x>.

Clay, T. (1953) Revisions of the genera of Mallophaga. I. The *Degeeriella*-complex. *Proceedings of the zoological Society of London*, **123**: 563–587. <https://doi.org/10.1111/j.1096-3642.1953.tb00188.x>.

Clay, T. (1958) Revisions of the Mallophaga genera. *Degeeriella* from the Falconiformes. *Bulletin of the British Museum (Natural History)*, *Entomology*, **7**: 121–207.

Clay, T. (1962) A new species of *Anatoecus* Cummings (Mallophaga) from *Phoenicopterus ruber* Linn. *Entomologische Berichten*, **22**: 220–226.

Clay, T. (1963) New species of *Trinoton* Nitzsch (Mallophaga, Insecta). *Memoirs of the Queensland Museum*, **14**: 87–93, pl. 9–11.

Clay, T. (1964) Geographical distribution of the Mallophaga (Insecta). *Bulletin of the British Ornithologists' Club*, **84**: 14–16.

Clay, T. (1966) Contributions towards a revision of *Myrsidea* Waterston (Menoponidae: Mallophaga) I. *Bulletin of the British Museum (Natural History)*, *Entomology*, **17**: 327–395. <https://doi.org/10.5962/bhl.part.14816>.

Clay, T. (1968) Contributions towards a revision of *Myrsidea* Waterston. III (Menoponidae: Mallophaga). *Bulletin of the British Museum (Natural History)*, *Entomology*, **21**: 203–243, 4 pl.

Clay, T. (1973) The species groups of *Pectinopygus* (Phthiraptera: Philopteridae). *Bulletin of the British Museum (Natural History)*, *Entomology*, **29**: 203–223, 3 pl.

Clay, T. (1974*a*) The Phthiraptera (Insecta) parasitic on flamingoes (Phoenicopteridae: Aves). *Journal of Zoology*, London, **172**: 483–490. <https://doi.org/10.1111/j.1469-7998.1974.tb04380.x>.

Clay, T. (1974*b*) The *macrogenitalis* group of *Strigiphilus* (Philopteridae: Phthiraptera). *Journal of Entomology*, (B), **43**: 139–147. <https://doi.org/10.1111/j.1365-3113.1975.tb00124.x>.

Clay, T. (1976*a*) Geographical distribution of avian lice (Phthiraptera): a review. *Journal of the Bombay natural History Society*, **71**: 536–547.

Clay, T. (1976*b*) The *spinosa* species-group, genus *Boopia* Piaget (Phthiraptera: Boopidae). *Journal of the Australian entomological Society*, **15**: 333–338. <https://doi.org/10.1111/j.1440-6055.1976.tb01712.x>.

Clay, T. (1981) A report on a collection of lice (Boopidae: Phthiraptera) on *Petrogale* (rock wallabies). *Proceedings of the Linnean Society of New South Wales*, **105**: 65–78.

Clay, T. & Meinertzhagen, R. (1938) Two new genera of Mallophaga. *Entomologist*, **71**: 73–76.

Clay, T. & Meinertzhagen, R. (1939) Three new genera of Mallophaga from Charadriiformes. *Annals and Magazine of natural History*, (11), **4**: 450–454. <https://doi.org/10.1080/00222933908527008>.

Clay, T. & Moreby, C. (1967) Mallophaga (biting lice) and Anoplura (sucking lice). Part II: keys and locality lists of Mallophaga and Anoplura. *Antarctic Research Series*, **10**: 157–196. <https://doi.org/10.1029/AR010p0157>.

Clayton, D. H. (1990) Host specificity of *Strigiphilus* owl lice (Ischnocera: Philopteridae), with the description of new species and host associations. *Journal of medical Entomology*, **27**: 257–265. <https://doi.org/10.1093/jmedent/27.3.257>.

Clayton. D. H., Bush, S. E., Goates, B. M. & Johnson, K. P. (2003) Host defense reinforces host-parasite cospeciation. *Proceedings of the national Academy of Sciences of the United States*, **100**: 15694–15699. <https://doi.org/10.1073/pnas.2533751100>.

Clayton, D. H. & Cotgreave, P. (1994) Relationship of bill morphology to grooming behaviour in birds. *Animal Behaviour*, **47**: 195–201. <https://doi.org/10.1006/anbe.1994.1022>.

Clayton, D. H., Koop, J. A. H., Harbison, C. W., Moyer, B.R. & Bush, S.E. (2010) How birds combat ectoparasites. *Open Ornithology Journal*, **3**: 41–71. <https://doi.org/10.2174/1874453201003010041>.

Clayton. D. H., Moyer, B. R., Bush, S. E., Jones, T. G., Gardiner, D. W., Rhodes, B. B. & Goller, F. (2005) Adaptive significance of avian beak morphology for ectoparasite control. *Proceedings of the royal Society*, (B), **272**: 811–817. <https://doi.org/10.1098/rspb.2004.3036>.

Clayton, D. H. & Walther, B. A. (2001) Influence of host ecology and morphology on the diversity of Neotropical bird lice. *Oikos*, **94**: 455–467. <https://doi.org/10.1034/j.1600-0706.2001.940308.x>.

Clements, J. F., Schulenberg, T. S., Iliff, M. J., Roberson, D., Fredericks, T. A., Sullivan, B. L. & Wood, C. L. (2021) The eBird/Clements checklist of birds of the world: v2021. <http://www.birds.cornell.edu/clementschecklist/download/>. [Accessed 3 March 2022].

Cohen, B. L., Baker, A. J., Blechschmidt, K., Dittman, D. L., Furness, R. W., Gerwin, J. A., Helbig, A. J., de Korte, J., Marshall, H. D., Palma, R. L., Peter, H.–U., Ramli, R., Siebold, I., Willcox, M. S., Wilson, R. H. & Zink, R.M. (1997) Enigmatic phylogeny of skuas (Aves: Stercorariidae). *Proceedings of the royal Society of London*, (B), **264**: 181–190. <https://doi.org/10.1098/rspb.1997.0026>.

Conci, C. (1942) Un nuovo genere di Somaphantidae, ascrivibile ad una nuova Sottofamiglia (Mallophaga-Liotheida). *Studi trantini di Scienze naturali*, **23**: 123–126.

Cummings, B. F. (1916) Studies on the Anoplura and Mallophaga, being a report upon a collection from the mammals and birds in the Society's gardens. Part II. *Proceedings of the zoological Society*, **1916**: 643–693. <https://doi.org/10.1111/j.1096-3642.1916.tb02041.x>.

Dalgleish, R. C. (1972) The *Penenirmus* (Mallophaga: Ischnocera) of the Picidae (Aves: Piciformes). *Journal of the New York entomological Society*, **80**: 83–104.

Dalgleish, R. C. & Price, R. D. (2003) A new genus and four new species of chewing lice (Phthiraptera: Amblycera: Menoponidae) from hummingbirds (Apodiformes: Trochilidae). *Occasional Papers of the Western Foundation of Vertebrate Zoology*, **7**: 1–9.

De Geer, C. (1778) *Mémoires pour servir à l`histoire naturelle des Insectes Aptères.* Stockholm (Hesselberg): i–xii + 1–950, pl. 1–49.

De Moya, R. S., Allen, J. M., Sweet, A. D., Walden, K. K. O., Palma, R. L., Smith, V. S., Cameron, S. L., Valim, M. P., Galloway, T. D., Weckstein, J. D. & Johnson, K. P. (2019) Extensive host switching of avian feather lice following the Cretaceous-Paleogene mass extinction event. *Communications Biology*, **2** [445]: [1–6]. <https://doi.org/10.1038/s42003-019-0689-7>.

DiBlasi, E., Johnson, K. P., Stringham, S. A., Hansen, A. N., Beach, A. B., Clayton D. H. & Bush, S. E. (2018) Phoretic dispersal influences parasite population genetic structure. *Molecular Ecology*, **27**: 2770–2779. <https://doi.org/10.1111/mec.14719>.

Douglas, H. D., III (2013) Colonial seabird's paralytic perfume slows lice down: an opportunity for parasite-mediated selection? *International Journal for Parasitology*, **43**: 399–407. <https://doi.org/10.1016/j.ijpara.2013.01.004>.

Douglas, H. D., III, Malenke, J. R. & Clayton, D. H. (2005) Is the citrus-like plumage odorant of crested auklets (*Aethia cristatella*) a defense against lice? *Journal of Ornithology*, **146**: 111–115. <https://doi.org/10.1007/s10336-004-0065-2>.

Dubinin, V. B. (1948) [Studies on the adaptation of ectoparasites. II. Ecological adaptations of feather-mites and Mallophaga]. *Parazitologieeskij Zbornik*, **9**: 191–222 [In Russian].

Dumbacher, J. P. (1999) Evolution of toxicity in Pitohuis. I. Effects of homobatrachotoxin on chewing lice (order Phthiraptera). *Auk*, **116**: 957–963. <https://doi.org/10.2307/4089675>.

Edwards, R. L. (1965) Revision of the genus *Aquanirmus* (Mallophaga: Philopteridae), parasitic on grebes (Podicipidae). *Canadian Entomologist*, **97**: 920–935. <https://doi.org/10.4039/Ent97920-9>.

Eichler, W. (1936) Die Biologie der Federlinge. *Journal für Ornithologie*, **84**: 471–505. <https://doi.org/10.1007/BF01917631>.

Eichler, W. (1939) Augewählte Beispiele über die verschiedenen Beziehungen zwischen Vögeln und ihren Außenparasiten. *Journal für Ornithologie*, **87**: 184–185.

Eichler, W. (1940) Wirtspezifität und stammesgeschichtliche Gleichläufigkeit (Fahrenholzsche Regel) bei Parasiten im allgemein und bei Mallophagen in besonderen. *Zoologischer Anzeiger*, **31**: 254–262.

Eichler, W. (1942) Die Entfaltungsregel und andere Gesetzmäßigkeiten in den parasite-genetischen Beziehungen der mallophagen und anderer ständiger Parasiten zu ihren Wirten. *Zoologischer Anzeiger*, **137**: 77–83.

Eichler, W. (1944*a*) Untersuchungen zur Epidemiologie der Außenparasiten. V. Übertragungsmöglichkeiten für flugunfähige Ektoparasiten. *Archiv für Wissenschaftliche und praktische Tierheilkunde*, **79**: 309–319.

Eichler, W. (1944*b*) Notulae mallophagologiae. X. *Anseriphilus* nov. gen. und andere Neuerungen bei amblyceren Federlingen. *Deutsche entomologische Zeitschrift*, **1943**: 56–64.

Eichler, W. (1946) Probleme der Mallophagenforschung. *Die Vögel der Heimat*, **18**: 205–217.

Eichler, W (1948*a*) Some rules in ectoparasitism. *Annals and Magazine of natural History*, (12), **1**: 588–598. <https://doi.org/10.1080/00222934808653932>.

Eichler, W. (1948*b*) Evolutionsfragen der Wirtspezifität. *Biologischen Zentralblatt*, **67**: 373–406.

Eichler, W. (1949) Phthirapterorum nova genera. *Bollettino della Societa entomologica italiana*, **79**: 11–13.

Eichler, W. (1950) Notulae mallophagologicae. XIII. Neue Goniodidae. *Doriana*, *Supplimento agli Annali del Museo civico di Storia naturale 'G. Doria',* **1**: 1–8.

Eichler, W. (1951*a*) Grenzfälle der Parasitendifferenzierung II. Esel- und Pferdelaus. *Monatshefte für Veterinärmedizin*, **6**: 76.

Eichler, W. (1951*b*) Die Entwicklung der Fragestellung in der Parasitologie. *Monatsheften für Veterinärmedizin,* **6**: 478–482.

Eichler, W. (1951*c*) Die Federlinge der Drosseln. *Bedeutung der Vogelwelt in Forschung und Praxis*, *Vortrage der I. Ornithologische Tagung der DDR am 21–22 Oktober 1950 in Leipzig*, **3**: 29–47.

Eichler, W. (1952*a*) *Eomenacanthus brachygaster* Giebel (Mallophaga). *Beiträge zur Entomologie*, **2**: 567–573.

Eichler, W. (1952*b*) Grenzfälle der Parasitendifferenzierung. III. Klippschliefer-Haarlinge. *Monatsheft für Veterinärmedizin*, **7**: 35–36.

Eichler, W. (1952*c*) Mallophagen-Synopsis. XV. Genus *Pseudomenopon*. *Zoologischer Anzeiger*, **148**: 30–40.

Eichler, W. (1953) Von Alexander Koenig gesammelte Federlinge. I. Von Singvögeln und Spechten. *Bonner zoologische Beiträge*, **4**: 333–343.

Eichler, W. (1954) Die Entwicklung der vorderen Saumborste bei *Anaticola*-Arten als Peitschenborste und zum fuhleranalogen Tastsinnesorgan. *Zoologischer Anzeiger*, **152**: 32–35.

Eichler, W. (1958) Bird lice: a biological test for ornithologists. *Emu*, **58**: 1–4, 2 pl. <https://doi.org/10.1071/MU958001>.

Eichler, W. (1959) Parasitophyletischer Studien zur Ornithosystematik. III. Mallophagen von *Balaeniceps rex*. *Senckenbergiana biologica*, **40**: 63–68.

Eichler, W. (1962) Die Problemstellung des phylogenetischen Parallelismus zwischen Parasit und Wirt nach ihrem gegenwärtigen Stand unter besonderen Berücksichtigung der Mallophagen. *Wiadomosci Parazytologiczne*, **8**: 285–296.

Eichler, W. (1963) Fünfter Band: Arthropoda. III. Abteilung: Insecta. 7. Buch. B. Phthiraptera. 1. Mallophaga. *In:* H. G. Bronn (ed.), *Klassen und Ordnungen des Tierreichs*, Leipzig (Akademische Verlagsgesellschaft Geest & Portig K.–G.): 1–vii + 1–291.

Eichler, W. (1966) Two new evolutionary terms for speciation in parasitic animals. *Systematic Zoology*, **15**: 216–218. <https://doi.org/10.2307/2411393>.

Eichler, W. (1967) Wirtsspezifität und nicht-geographische Subspezies-Differenzierung bei parasitischen Insekten. *Wiadomosci Parazytologiczne*, **13**: 379–391.

Eichler, W. (1968) Die Gültigkeit eines Hospitosubspeziesnamens bei Parasites nach Artikel 45 der zoologischen Nomenklaturregeln. *Deutsche entomologische Zeitschrift*, *Neue Folge*, **16**: 375–377. <https://doi.org/10.1002/mmnd.19690160406>.

Eichler, W. (1970*a*) Der Subspezies- und Populationsbegriff bei parasitischen Insekten. *Bericht über die 10. Wandersammlung Deutscher Entomologen*: 111–137.

Eichler, W. (1970*b*) Evolutionistische Aspekte des Wirt-Parasit-Verhältnisse. *Angewandte Parasitologie*, **11**: 134–140.

Eichler, W. (1970*c*) Artangabe, Wirtsangabe und Wirtspezifität bei Ektoparasiten. Erfahrungen und Empfehlungen zur aviparasitologischen Methodic. *Beiträge zur Vogelkunde*, **16**: 72–86.

Eichler, W. (1971) *Gallacanthus* nov. gen. pro *Eomenacanthus cornutus* (Schömmer, 1913) vom Haushuhn. *Angewandte Parasitologie*, **12**: 166–168.

Eichler, W. (1972) Neuere Modellvorstellungen zur Mikroevolution der Mallophagen. *Wiadomosci Parazytologiczne*, **18**: 513–515.

Eichler, W. (1973) Neuere Überlegungen zu den parasitophyletischen Regeln. *Helminthologia*, **14**: 441–450.

Eichler, W. (1976) Der Parasitismus als dialektischer Indikator der Evolution – mit besonderer Berücksichtigung der parasitophyletischen Regeln. *Biologie in der Schule*, **25**: 35–38.

Eichler, W. (1979) Kriterien für die Gattungs- und Untergattungsstufe bei Ektoparasiten unter besonderer Berücksichtigung der Mallophagen. *Folia parasitologica (Praha)*, **26**: 151–157.

Eichler, W. (1980*a*) Kriterien für die Speziesstufe bei Ektoparasiten (unter besonderer Berücksichtungen der Mallophagen). *Acta parasitologica polonica*, **27**: 409–414.

Eichler, W. (1980*b*) Über gewisse Wechselbeziehungen zwischen Ökologie und Evolution in der Sphäre des Parasitismus. *Deutsche entomologische Zeitschrift*, *Neue Folge*, **27**: 189–197. <https://doi.org/10.1002/mmnd.4810270403>.

Eichler, W. (1980*c*) Die Evolution des Parasitismus in ihrer Widerspiegelung durch die parasitophyletischen Regeln. *In*: W. Vent (ed.), *Beiträge zu Prinzipen und Problemen der Systematik und Evolutionsforschung aus dem Museum für Naturkunde der Humboldt-Universität zu Berlin*, Berlin (Humboldt-Universität): 129–137.

Eichler, W. (1982) Notulae Mallophagologicae. XIII. *Goliathopon* nov. gen. und weitere neue Taxa der Gattungsstufe. *Deutsche entomologische Zeitschrift*, *Neue Folge*, **29**: 81–87. <https://doi.org/10.1002/mmnd.19820290114>.

Eichler (1985) Recent discussions and modern aspects of Fahrenholz' rule and cophylogeny in Mallophaga and Anoplura. *Wiadmosci Parazytologiczne*, **31**: 523–525.

Eichler, E. (1987) Aspekte der Abseitsevolution vom Standpunkt der Mallophagenforschung. *Wiadmosci Parazytologiczne*, **33**: 119–124.

Eichler, W. (1990) Koevolutionsaspekte des Parasititsmus aus neuer Sicht. *Rudolstädter naturhistorische Schriften*, **3**: 19–31.

Eichler, W. & Vasjukova, T. (1980) Die Mallophagengattung *Anaticola* (Phthiraptera, Mallophaga). *Deutsche entomologische Zeitschrift*, *Neue Folge*, **27**: 335–375, pl. 17–31. <https://doi.org/10.1002/mmnd.19800270413>.

Eichler, W. & Vasjukova, T. (1981) Die Mallophagengattung *Trinoton*. *Mitteilungen aus dem zoologischen Museum in Berlin,* **57**: 23–62. <https://doi.org/10.1002/mmnz.19810570105>.

Eichler, W. & Złotorzycka, J. (1963*a*) Fünf neue *Menacanthus*-Arten aus mitteleuropäischen Singvögeln. *Zeitschrift für Parasitenkunde*, **23**: 367–375. <https://doi.org/10.1007/BF00331235>.

Eichler, W. & Złotorzycka, J. (1963*b*) Studien über Raubvogelfederlinge. IV. Bemerkenswerte Colpocephalidae von Geiern (Vulturidae und Aegypiidae). *Acta parasitologica polonica*, **11**: 198–221, 3 pl.

Eichler, W. & Złotorzycka, J. (1971) Studien über Raubvogelfederlinge. VII. Die *Neocolpocephalum*-Gruppe und ihre Wirt-Parasit-Beziehungen. *Angewandte Parasitologie*, **12**: 19–33.

Emerson, K. C. (1956) Mallophaga (chewing lice) occurring on the domestic chicken. *Journal of the Kansas entomological Society*, **29**: 63–79.

Emerson, K. C. & Elbel, R. E. (1957) New records of Mallophaga from wild chickens. *Journal of Parasitology*, **43**: 381–382. <https://doi.org/10.2307/3274372>.

Erlich, P. R. & Raven, P. H. (1964) Butterflies and plants: a study in coevolution. *Evolution*, **18**: 586–608. <https://doi.org/10.1111/j.1558-5646.1964.tb01674.x>.

Escalante, G. C., Sweet, A. D., McCracken, K. G., Gustafsson, D. R., Wilson, R. E. & Johnson, K. P. (2016) Patterns of cryptic host specificity in duck lice based on molecular data. *Medicinal and veterinary Entomology*, **30**: 200–208. <https://doi.org/10.1111/mve.12157>.

Eveleigh, E. S. & Threlfall, W. (1976) Population dynamics of lice (Mallophaga) on auks (Alcidae) from Newfoundland. *Canadian Journal of Zoology*, **54**: 1694–1711. <https://doi.org/10.1139/z76-197>.

Evenhuis, N. L. (2008) The 'mihi itch'—a brief history. *Zootaxa*, **1890**: 59–68. <https://doi.org/10.11646/zootaxa.1890.1.3>.

Ewing, H. E. (1929) *A manual of external parasites*. Springfield, Illinois (C. C. Thomas): i–xiv + 1–225. <https://doi.org/10.2307/3222065>.

Fabiyi, J. O. (1972) The occurrence of *Cuclotogaster occidentalis* and *Amyrsidea* sp. *powelli* group (Mallophaga: Insecta) on the domestic fowl in the Vom area of Benue-Plateau State, Nigeria. *Veterinary Record*, **1972**: 198. <https://doi.org/10.1136/vr.91.8.198-a>.

Fabiyi, J. P. (1980) The grey-breasted helmet guineafowl (*Numida meleagridis galeata*), a new host for *Amyrsidea powelli* (Bedford 1920) and *Cuclotogaster occidentalis* (Tendeiro 1954). *Revue d'Élevage et de Médecine vétérinaire des Pays tropicaux*, **33**: 303–304.

Fabiyi, J. P. (1986) Exclusion in Nigeria of chickens and guinea-fowls from the host range of *Menacanthus stramineus* (Mallophaga: Insecta). *Revue d'Élevage et de Médecine vétérinaire des Pays tropicaux*, **39**: 377–379.

Fabiyi, J. P. (1996) Association between duration of humid season and geographical distribution patterns of different species of chewing lice (Mallophaga: Insecta) infesting domestic chicken in Nigeria. *Journal of Parasitology*, **82**: 1034–1036. <https://doi.org/10.2307/3284220>.

Fabiyi, J. P., Alayande, M. O., Akintule, A. O., Lawal, M. D., Mahmuda, A. & Usman, M. (2017) Prevalence and seasonal fluctuations of ectoparasites infesting backyard turkeys, *Meleagris gallopavo*, in Sokoto, Northwestern Nigeria. *Revue d'Élevage et de Médecine vétérinaire des Pays tropicaux*, **70**: 21–24. <https://doi.org/10.19182/remvt.31391>.

Fahrenholz, H. (1913) Ectoparasiten und Abstammungslehre. *Zoologischen Anzeiger*, **41**: 371–374.

Fedorenko, I. A. (1979) A new species of the genus *Philopterus* Nitzsch, 1818 (Mallophaga, Philopteridae)—parasite of the wood warbler. *Trudy Vses entomologicheskogo Obshch,* **61**: 17–19.

Fedorenko, I. A. (1983) New species of the genus *Philopterus* (Mallophaga, Philopteridae) from wheatears of the USSR. *Vestnik Zoologii*, **1**: 27–33.

Fedorenko, I. A. (1984) Species of the genus *Philopterus* (Mallophaga, Ischnocera) from larks of the USSR fauna. *Vestnik Zoologii*, **3**: 21–29.

Forster, J. R. (1788) *Enchiridion historiae naturali inserviens, quo termini et delineationes ad avium, piscium, insectorum et plantarum adumbrationes intelligendas et concinnandas, secundum systematis linnaeani continentur*. Edinburgh (C. Stewart & Son): 1–224. <https://doi.org/10.5962/bhl.title.36973>.

Galloway, T. D. & Lamb, R. J. (2015) Abundance and stability of populations of a chewing louse, *Mulcticola macrocephalus* (Phthiraptera: Philopteridae), on common nighthawks, *Chordeiles minor* (Caprimulgiformes: Caprimulgidae) in Manitoba, Canada. *Canadian Entomologist*, **147**: 723–731. <https://doi.org/10.4039/tce.2014.85>.

Galloway, T. D. & Palma, R. L. (2008) Serendipity with chewing lice (Phthiraptera: Menoponidae, Philopteridae) infesting rock pigeons and mourning doves (Aves: Columbiformes: Columbidae) in Manitoba, with new records for North America and Canada. *Canadian Entomologist*, **140**: 208–218. <https://doi.org/10.4039/n07-041>.

Geist, R. M. (1931) Additional Mallophaga from Ohio birds. *Ohio Journal of Science*, **31**: 505–509.

Goodman, G. B., Klingensmith, M. C., Bush, S. E. & Clayton, D. H. (2020) The role of scratching in the control of ectoparasites on birds. *Auk*, **137**: 1–9. <https://doi.org/10.1093/auk/ukaa010>.

Gould, J. (1852) On a new and most remarkable form in ornithology. *Proceedings of the zoological Journal of London*, **19** (2): 1–2. <https://doi.org/10.1111/j.1096-3642.1851.tb01123.x>.

Graf, D. L. (2007) Palearctic freshwater mussel (Mollusca: Bivalvia: Unionoida) diversity and the Comparatory Method as a species concept. *Proceedings of the Academy of natural Sciences of Philadelphia*, **156**: 71–88. <https://doi.org/10.1635/0097-3157(2007)156[71:PFMMBU]2.0.CO;2>.

Gray, G. R. (1845) *The genera of birds: comprising their generic characters, a notice of the habits of each genus, and an extensive list of species referred to several genera*. Volume **2**. London (Longman, Brown, Green & Longmans): [unpaginated]. <https://doi.org/10.5962/bhl.title.126497>.

Grieves, L. A., Bottini, C. L. J., Branfireun, B. A., Bernards, M. A., MacDougall-Shackleton, S. A. & MacDougall-Shackleton, E. A. (2020) Food stress, but not experimental exposure to mercury, affects songbird preen oil composition. *Ecotoxicology*, **29**: 275–285. <https://doi.org/10.1007/s10646-020-02171-x>.

Grossi, A. A., Sharanowski, B. J. & Galloway, T. D. (2014) *Anatoecus* species (Phthiraptera: Philopteridae) from Anseriformes in North America and taxonomic status of *Anatoecus dentatus* and *Anatoecus icterodes*. *Canadian Entomologist*, **146**: 598–608. <https://doi.org/10.4039/tce.2014.12>.

Grossi, A. & Proctor, H. (2021) Variation in ectosymbiont assemblages associated with rock pigeons (*Columba livia*) from coast to coast in Canada. *Diversity*, **13** [9]: [1–18]. <https://doi.org/10.3390/d13010009>.

Guérin-Méneville, F. E. (1843) Oiseaux nouveaux découverts par M.M. Ferret et Galinier pendant leur voyage en Abyssinie. *Revue zoologique*, **6**: 321–322.

Gustafsson, D. R. (2019) New genus and two new species of chewing lice (Phthiraptera: Ischnocera) parasitizing New Guinean *Peltops* (Passeriformes: Artamidae). *Journal of Parasitology*, **105**: 840–845. <https://doi.org/10.1645/19-83>.

Gustafsson, D. R. & Bush, S. E. (2017) Morphological revision of the hyperdiverse *Brueelia*-complex (Insecta: Phthiraptera: Ischnocera: Philopteridae) with new taxa, checklists and generic key. *Zootaxa*, **4313**: 1–443. <https://doi.org/10.11646/zootaxa.4313.1.1>.

Gustafsson, D. R. & Bush, S. E. (2021) Descriptions of seven new species of *Brueelia* Kéler 1936 (Phthiraptera: Ischnocera: Philopteridae) from North American sparrows (Aves: Passeriformes: Passerellidae), and review of host use by *Brueelia vulgata*. *Journal of natural History*, **54**: 2071–2112. <https://doi.org/10.1080/00222933.2020.1836280>.

Gustafsson, D. R., Bush, S. E. & Palma, R. L. (2019*b*) The genera and species of the *Brueelia*-complex (Phthiraptera: Philopteridae) described by Mey (2017). *Zootaxa*, **4615**: 252–284. <https://doi.org/10.11646/zootaxa.4615.2.2>.

Gustafsson, D. R., Chu, X., Bush, S. E. & Zou, F. (2018*b*) Ten new species of *Brueelia* Kéler, 1936 (Phthiraptera: Ischnocera: Philopteridae) from nuthatches (Aves: Passeriformes: Sittidae), tits and chickadees (Paridae), and goldcrests (Regulidae). *Acta parasitologica,* **63**: 527–557. <https://doi.org/10.1515/ap-2018-0063>.

Gustafsson, D. R., Clayton, D. H. & Bush, S. E. (2018*a*) Twelve new species of *Priceiella* (Phthiraptera: Ischnocera: Philopteridae) from Old World babblers, with keys to species of two subgenera and checklists of species for the genus. *Zootaxa*, **4382**: 401–449. <https://doi.org/10.11646/zootaxa.4382.3.1>.

Gustafsson, D. R., Lei, L., Chu, X., Zou, F. & Bush, S. E. (2019*c*) New genus and two new species of chewing lice from Southeast Asian trogons (Aves: Trogoniformes), with a revised key to the *Philopterus*-complex. *Acta parasitologica*, **64**: 86–102. <https://doi.org/10.2478/s11686-018-00011-x>.

Gustafsson, D. R. & Olsson, U. (2012*a*) Flyway homogenization or differentiation? Insights from the phylogeny of the sandpiper (Charadriiformes: Scolopacidae: Calidrinae) wing louse genus *Lunaceps* (Phthiraptera: Ischnocera). *International Journal for Parasitology*, **42**: 93–102. <https://doi.org/10.1016/j.ijpara.2011.11.003>.

Gustafsson, D. R. & Olsson, U. (2012*b*) The 'very thankless task": revision of *Lunaceps* Clay & Meinertzhagen, 1939 (Insecta: Phthiraptera: Ischnocera: Philopteridae), with descriptions of six new species and one new subspecies. *Zootaxa*, **3377**: 1–85. <https://doi.org/10.11646/zootaxa.3377.1.1>.

Gustafsson, D. R. & Olsson, U. (2017) Unexpected distribution patterns of *Carduiceps* feather lice (Phthiraptera: Ischnocera: Philopteridae) on sandpipers (Aves: Charadriiformes: Scolopacidae). *Systematic Entomology*, **42**: 509–522. <https://doi.org/10.1111/syen.12227>.

Gustafsson, D. R., Oslejskova, L., Najer, T., Sychra, O. & Zou, F. (2019*a*) Redescriptions of thirteen species of chewing lice in the *Brueelia*-complex (Phthiraptera, Ischnocera, Philopteridae), with one new synonymy and a neotype designation for *Nirmus lais* Giebel, 1874. *Deutsche entomologische Zeitschrift*, **66**: 17–39. <https://doi.org/10.3897/dez.66.32423>.

Gustafsson, D. R., Tian, C., Ren, M., Liu, Z., Yu, X. & Zou, F. (2021*a*) new species and new records of *Priceiella* (Phthiraptera: Ischnocera: *Brueelia*-complex) from South China. *Journal of Parasitology,* **107**: 863–877. <https://doi.org/10.1645/21-68>.

Gustafsson, D. R., Tian, C., Yu, X., Xu, L., Wu, S. & Zou, F. (2021*b*) Unintentional parasite conservation success: chewing lice recovered from crested ibis, *Nipponia nippon*, in breeding program facilities in Shaanxi, China. *Biodiversity and Conservation*, **30**: 3939–3963. <https://doi.org/10.1007/s10531-021-02283-8>.

Gustafsson, D. R., Tsurumi, M. & Bush, S. E. (2015) The chewing lice (Insecta: Phthiraptera: Ischnocera, Amblycera) of Japanese pigeons and doves (Columbiformes), with descriptions of three new species. *Journal of Parasitology*, **101**: 304–313. <https://doi.org/10.1645/14-683.1>.

Gustafsson, D. R & Zou, F. (2020*a*) Descriptions of three congeneric species of chewing lice of the *Oxylipeurus*-complex (Insecta: Phthiraptera: Philopteridae) from the turkey, *Meleagris gallopavo*, including a new genus and a new species. *Zootaxa*, **4801**: 488–512. <https://doi.org/10.11646/zootaxa.4801.3.4>.

Gustafsson, D. R. & Zou, F. (2020*b*) *Gallancyra* gen. nov. (Phthiraptera: Ischnocera), with an overview of the geographical distribution of chewing lice parasitizing chicken. *European Journal of Taxonomy*, **685**: 1–36. <https://doi.org/10.5852/ejt.2020.685>.

Hafner, D. J., Hafner, M. S., Spradling, T. A., Light, J. E. & Demastes, J. W. (2019) Temporal and spatial dynamics of competitive parapatry in chewing lice. *Ecology and Evolution*, **9**: 7410–6424. <https://doi.org/10.1002/ece3.5183>.

Hahn, D. C., Price, R. D. & Osenton, P. C. (2000) Use of lice to identify cowbird hosts. *Auk*, **117**: 943–951. <https://doi.org/10.1093/auk/117.4.943>.

Harbison, C. W., Bush, S. E., Malenke, J. R. & Clayton, D. H. (2008) Comparative transmission dynamics of competing parasite species. *Ecology*, **2008**: 3186–3194. <https://doi.org/10.1890/07-1745.1>.

Harbison, C. W., Jacobsen, M. V. & Clayton, D. H. (2009) A hitchhiker's guide to parasite transmission: the phoretic behaviour of feather lice. *International Journal for Parasitology*, **39**: 569–575. <https://doi.org/10.1016/j.ijpara.2008.09.014>.

Haribal, M., Dhondt, A. A., Rosane, D. & Rodriguez, E. (2005) Chemistry of preen gland secretions of passerines: different pathways to the same goal? why? *Chaemoecology*, **15**: 251–260. <https://doi.org/10.1007/s00049-005-0318-4>.

Haribal, M., Proctor, H., Dhondt, A. A. & Rodriguez, E. (2011) Biology of house finch feather mites, *Proctophyllodes pinnatus* (Acari: Proctophyllodidae), parallels variation in preen gland secretions. *International Journal of Acarology*, **37**: 75–90. <https://doi.org/10.1080/01647954.2010.495952>.

Harnos, A., Lang, Z., Petrás, D., Bush, S. E., Szabo, K. & Rózsa, L. (2017) Size matters for lice on birds: coevolutionary allometry of host and parasite body size. *Evolution*, **71**: 421–431. <https://doi.org/10.1111/evo.13147>.

Harrison, L. (1915*a*) Mallophaga from *Apteryx*, and their significance; with a note on the genus *Rallicola*. *Parasitology*, **8**: 88–100. <https://doi.org/10.1017/S0031182000010428>.

Harrison, L. (1915*b*) On a new family and five new genera of Mallophaga. *Parasitology*, **7**: 383–407. <https://doi.org/10.1017/S0031182000009793>.

Harrison, L. (1916) The genera and species of Mallophaga. *Parasitology*, **9**: 1–156. <https://doi.org/10.1017/S0031182000005989>.

Harrison, L. & Johnston, T. H. (1916) Mallophaga from marsupials. *Parasitology*, **8**: 338–359. <https://doi.org/10.1017/S0031182000010635>.

Hayman, P., Marchant, J. & Prater, T. (1986) *Shorebirds*. *An identification guide to the waders of the world.* London (Christopher Helm, A&C Black): 1–412.

Hoberg, E. P., Brooks, D. R. & Siegel-Causey, D. (1997) Host-parasite co-speciation: history, principles, and prospects. *In:* D. H. Clayton & J. Moore (ed.), *Host-parasite evolution: general principles and avian models*, Oxford (Oxford University Press): 212–235.

Hopkins, G. H. E. (1939) Straggling in the Mallophaga. *Entomologist*, **72**: 75–77.

Hopkins, G. H. E. (1942) The Mallophaga as an aid to the classification of birds. *Ibis*, **84**: 94–106. <https://doi.org/10.1111/j.1474-919X.1942.tb03423.x>.

Hopkins, G. H. E. (1945) Lice of the hyraxes, especially *Procavia capensis*. *Journal of the entomological Society of South Africa*, **8**: 1–12.

Hopkins, G. H. E. (1949*a*) Some factors which have modified the phylogenetic relationships between parasite and host in the Mallophaga. *Proceedings of the Linnean Society of London*, **161**: 37–39. <https://doi.org/10.1111/j.1095-8312.1949.tb00536.x>.

Hopkins, G. H. E. (1949*b*) Technique for mounting lice. *Proceedings of the zoological Society of London*, **119**: 387. <https://doi.org/10.1111/j.1096-3642.1949.tb00888.x>.

Hopkins, G. H. E. & Clay, T. (1952) *A check list of the genera & species of Mallophaga*. Norwich, U. K. (Jarrold & Sons Ltd.): 1–362. <https://doi.org/10.5962/bhl.title.118844>.

Hoyle, W. L. (1938) Transmission of poultry parasites by birds with special reference to the 'English' or house sparrow and chickens. *Transactions of the Kansas Academy of Sciences*, **41**: 379–384.

Hughes, J., Kennedy, M., Johnson, K. P., Palma, R. L. & Page, R. D. M. (2007) Multiple cophylogenetic analyses reveal frequent cospeciation between pelecaniforms birds and *Pectinopygus* lice. *Systematic Biology*, **56**: 232–251. <https://doi.org/10.1080/10635150701311370>.

Jałoszynski, P. (2015) Confused identity: subgenera of *Pseudoeudesis* Binaghi belong in two tribes (Coleoptera: Staphylinidae: Scydmaeninae). *Zootaxa*, **4048**: 493–507. <https://doi.org/10.11646/zootaxa.4048.4.2>.

Jałoszynski, P., Gustafsson, D. R., Wanat, A. & Wanat, M. (2014) Type specimens of Phthiraptera in the collection of Jadwiga Złotorzycka preserved in the Museum of Natural History, University of Wrocław. *Genus*, **25**: 645–661.

Johnson, K. P., Adams, R. J. & Clayton, D. H. (2002*b*) The phylogeny of the louse genus *Brueelia* does not reflect host phylogeny. *Biological Journal of the Linnean Society*, **77**: 233–247. <https://doi.org/10.1046/j.1095-8312.2002.00107.x>.

Johnson, K. P., Bush, S. E. & Clayton, D. H. (2005*b*) Correlated evolution of host and parasite body size: tests of Harrison's rule using birds and lice. *Evolution*, **59**: 1744–1753. <https://doi.org/10.1111/j.0014-3820.2005.tb01823.x>.

Johnson, K. P. & Clayton, D. H. (2003) The biology, ecology, and evolution of chewing lice. *In*: R. D. Price, R. A. Hellenthal, R. L., Palma, K. P. Johnson & D. H. Clayton, *The chewing lice: world checklist and biological overview*, *Illinois Natural History Survey Special Publications*, **24**, Champaign, Illinois (Illinois Natural History Survey): i–x + 1–501.

Johnson, K. P., Cruickshank, R. H., Adams, R. J., Smith, V. S., Page, R. D. M., Clayton, D. H. (2005*a*) Dramatically elevated rate of mitochondrial substitution in lice (Insecta: Phthiraptera). *Molecular Phylogenetics and Evolution*, **26**: 231–242. <https://doi.org/10.1016/S1055-7903(02)00342-1>.

Johnson, K. P., Kennedy, M. & McCracken, K. G. (2006) Reinterpreting the origins of flamingo lice: cospeciation or host switching? *Biology Letters*, **2**: 275–278. <https://doi.org/10.1098/rsbl.2005.0427>.

Johnson, K. P., Shreve, S. M. & Smith, V. S. (2012) Repeated adaptive divergence of microhabitat specialization in avian feather lice. *BMC Biology*, **10** [52]: [1–11]. <https://doi.org/10.1186/1741-7007-10-52>.

Johnson, K. P., Weckstein, J. D., Meyer, M. J. & Clayton, D. H. (2011) There and back again: switching between host orders by avian body lice (Ischnocera: Goniodidae). *Biological Journal of the Linnean Society*, **102**: 614–625. <https://doi.org/10.1111/j.1095-8312.2010.01612.x>.

Johnson, K. P., Williams, B. L., Drown, D. M., Adams, R. J. & Clayton, D. H. (2002*a*) The population genetics of host specificity: genetic differentiation in dove lice (Insecta: Phthiraptera). *Molecular Ecology*, **22**: 25–38. <https://doi.org/10.1046/j.0962-1083.2001.01412.x>.

Johnston, T. H. & Harrison, L. (1911) Notes on some mallophagan generic names. *Proceedings of the Linnean Society of New South Wales*, **36**: 321–328. <https://doi.org/10.5962/bhl.part.21901>.

Jäch, M. A. (2006) Taxonomy and nomenclature threatened by D. Makhan. *Koleopterologische Rundschau*, **76**: 360.

Kaila, L. (2015) The *Elachista dispunctella* (Duponchel) complex (Lepidoptera, Elachistidae) revisited, with exceptional level of synonymy. *Zootaxa*, **3980**: 301–358. <https://doi.org/10.11646/zootaxa.3980.3.1>.

Kaiser, H., Crother, B. I., Kelly, C. M. R., Luiselli, L., O'Shea, M., Ota, H., Passos, P., Schleip, W. D. & Wüster, W. (2013) Best practices: in the 21st century, taxonomic decisions in herpetology are acceptable only when supported by a body of evidence and published via peer-review. *Herpetological Review*, **44**: 8–23.

Kéler, S. von (1936) Über einige Mallophagen aus Rossitten. *Arbeiten über morphologische und taxonomische Entomologie aus Berlin-Dahlem*, **3**: 256–264.

Kéler, S. von (1939) Zur Kenntnis der Mallophagen-Fauna Polens. *Zeitschrift für Parasitenkunde*, **11**: 47–57. <https://doi.org/10.1007/BF02122077>.

Kéler, S. von (1957) Über die Deszendenz und die Differenzierung der Mallophagen. *Zeitschrift für Parasitenkunde*, **18**: 55–160. <https://doi.org/10.1007/BF00259718>.

Kéler, S. von (1959) Über die Wirtstreue und die Verbreitung der Mallophagen. *Zeitschrift für Parasitenkunde*, **19**: 375–410. <https://doi.org/10.1007/BF00260225>.

Kéler, S. von (1960) Über die dualistische Differenzierung der Gattung *Anatoecus* Cummings (Mallophaga). *Zeitschrift für Parasitenkunde*, **20**: 207–316. <https://doi.org/10.1007/BF00259517>.

Kellogg, V. L. (1896) New Mallophaga II, from land birds, together with an account of mallophagous mouth-parts. *Proceedings of the California Academy of Sciences*, **2**: 431–548.

Kellogg, V. L. (1903) Two new genera of Mallophaga. *Biological Bulletin*, **5**: 85–91. <https://doi.org/10.2307/1535514>.

Kellogg, V. L. & Kuwana, S. I. (1902) Papers from the Hopkins Stanford Galapagos Expedition, 1898–1899. X. Entomological results (8). Mallophaga from birds. *Proceedings of the Washington Academy of Sciences*, **4**: 457–499. <https://doi.org/10.5962/bhl.part.18574>.

Kim, K. C. (1988) Evolutionary parallelism in Anoplura and eutherian mammals. *In:* M. W. Service (ed.), *Biosystematics of haematophagous Insects*, *Systematics Association Special Volume* **37**, Oxford (Clarendon Press): 91–114.

Kirk, W. D. J. (1991) The size relationship between insects and their hosts. *Ecological Entomology*, **16**: 351–359. <https://doi.org/10.1111/j.1365-2311.1991.tb00227.x>.

Klassen, G. J. (1992) Coevolution: a history of the macroevolutionary approach to studying host-parasite associations. *Journal of Parasitology*, **78**: 573–587. <https://doi.org/10.2307/3283532>.

Knox, A. G. (1993) Richard Meinertzhagen—a case of fraud examined. *Ibis*, **135**: 320–325. <https://doi.org/10.1111/j.1474-919X.1993.tb02851.x>.

Kolattukudy, P. E., Bohnet, S. & Rogers, L. (1987) Diesters of 3-hydroxy fatty acids produced by the uropygial glands of female mallards uniquely during the mating season. *Journal of Lipid Research*, **28**: 582–588. <https://doi.org/10.1016/S0022-2275(20)38683-1>.

Kolencik, S., Sychra, O. & Allen, J. M. (2021) Another puzzle piece in the systematics of the chewing louse genus *Myrsidea*, with a description of a new genus *Apomyrsidea*. *European Journal of Taxonomy*, **748**: 36–50. <https://doi.org/10.5852/ejt.2021.748.1339>.

Koop, J. A. H., DeMatteo, K. E., Parker, P. G. & Whiteman, N. K. (2014) Birds are islands for parasites. *Biology Letters*, **10** [20140255]: [1–5]. <https://doi.org/10.1098/rsbl.2014.0255>.

Krasnov, B. R., Kiefer, D., Warburton, E. M. & Khokhlova, I. S. (2016) Szidat's rule re-tested: relationships between flea and host phylogenetic clade ranks in four biogeographic realms. *Parasitology*, **143**: 723–731. <https://doi.org/10.1017/S0031182016000159>.

Lee, L., Tan, D. J. X., Obona, J., Gustafsson, D. R., Ang, Y. & Meier, R. (2022) Hitchhiking into the future on a fly: toward a better understanding of phoresy and avian louse evolution (Phthiraptera) by screening bird carcasses for phoretic lice on hippoboscid flies (Diptera). *Systematic Entomology*, **47**: 420–429. <https://doi.org/10.1111/syen.12539>.

Leonardi, M. S., Virrueta Herreira, S., Sweet, A., Negrete, J. & Johnson, K. P. (2019) Phylogenomic analysis of seal lice reveals codivergence with their hosts. *Systematic Entomology,* **44**: 699–708. <https://doi.org/10.1111/syen.12350>.

Lesson, R. P. (1831) *Traité d'ornithologie, ou, Tableau méthodique des ordres, sous-ordres, familles, tribus, genres, sous-genres et races d'oiseaux: ouvrage entièrement neuf, formant le catalogue le plus complet des espèces réunies dans les collections publiques de la France.* Bruxelles (F. G. Levrault): i–xxxii + 1–659. <https://doi.org/10.5962/bhl.title.51958>.

Light, J. E. & Hafner, M. S. (2007) Cophylogeny and disparate rates of evolution in sympatric lineages of chewing lice on pocket gophers. *Molecular Phylogenetics and Evolution*, **45**: 997–1013. <https://doi.org/10.1016/j.ympev.2007.09.001>.

Light, J. E. & Hafner, M. S. (2008) Codivergence in heteromyid rodents (Rodentia: Heteromyidae) and their sucking lice of the genus *Fahrenholzia* (Phthiraptera: Anoplura). *Systematic Biology*, **57**: 449–465. <https://doi.org/10.1080/10635150802169610>.

Light, J. E., Nessner, C. E., Gustafsson, D. R., Wise, S. R. & Voelker, G. (2016) Remarkable levels of avian louse (Insecta: Phthiraptera) diversity in the Congo Basin. *Zoologica scripta*, **45**: 538–551. <https://doi.org/10.1111/zsc.12170>.

Lindholm, A. K., Venter, G. J. & Ueckermann, E. A. (1998) Persistence of passerine ectoparasites on the diederik cuckoo *Chrysococcyx caprius*. *Journal of Zoology*, London, **244**: 145–153. <https://doi.org/10.1111/j.1469-7998.1998.tb00016.x>.

Linnaeus, C. (1758) *Systema Naturae per regna tria naturae, secundum classes, ordines, genera, species, cum characteribus, differentiis, synonymis, locis*. Editio decima, reformata. Tomus **1**. Holmiae (Laurentii Salvii): [i–iv] + 1–824. <https://doi.org/10.5962/bhl.title.542>.

Literák, I., Sychra, O., Resendes, R. & Rodrígues, P. (2015) Chewing lice in Azorean blackcaps (*Sylvia atricapilla*): a contribution to parasite island syndromes. *Journal of Parasitology*, **101**: 252–254. <https://doi.org/10.1645/14-601.1>.

Lonc, E. (1985) A morphometric analysis of certain characters in two species of *Columbicola* (Mallophaga: Esthiopteridae). *Angewandte Parasitologie*, **26**: 245–248.

Lonc, E., Mordzejewska, M., Saxena, A. K., Złotorzycka, J. & Trivedi, M. C. (1992) Morphometric variability of the mallophagan populations (Insecta, Phthiraptera, Amblycera and Ischnocera) from the Polish and Indian domestic fowl (*Gallus gallus* f. dom.). *Rudolstädter naturhistorische Schriften*, **4**: 59–70.

Lyal, C. H. C. (1986) Coevolutionary relationships of lice and their hosts: a test of Fahrenholz' rule. *In:* A. R. Stone & D. L. Hawksworth (ed.), *The Systematics Association Special Volume* **32**, *Coevolution and systematics*, Oxford (Systematics Association and Clarendon Press): 77–91.

Malenke, J. R., Newbold, N. & Clayton, D. H. (2011) Condition-specific competition governs the geographic distribution and diversity of ectoparasites. *American Naturalist*, **177**: 522–534. <https://doi.org/10.1086/658176>.

Martinů, J., Sychra, O., Literák, I., Čapek, M., Gustafsson, D. L. & Štefka, J. (2015) Host generalists and specialists emerging side by side: an analysis of evolutionary patterns in the cosmopolitan chewing louse genus *Menacanthus*. *International Journal for Parasitology*, **45**: 63–73. <https://doi.org/10.1016/j.ijpara.2014.09.001>.

Mauersberger, G. & Mey, E. (1993) Mallophagen und Vogelsystem—Beitrag zur Diskussion der 'Parasitophyletik'. *Mitteilungen aus dem zoologische Museum in Berlin*, **69** (Supplement): 3–30. <https://doi.org/10.1002/mmnz.4840690302>.

Mayr, G. (2004) Morphological evidence for sister group relationship between flamingos (Aves: Phoenicopteridae) and grebes (Podicipedidae). *Zoological Journal of the Linnean Society*, **140**: 157–169. <https://doi.org/10.1111/j.1096-3642.2003.00094.x>.

Mey, E. (1982) Mongolische Mallophagan I. *Mitteilungen aus der zoologische Museum in Berlin*, **58**: 155–195.

Mey, E. (1993) Zwei neue ischnocere Federlinge (Insecta, Phthiraptera) der Stelzenrallen (Mesitornithidae) von Madagaskar. *Mitteilungen aus dem zoologische Museum in Berlin*, **69**: 147–164. <https://doi.org/10.1002/mmnz.4840690307>.

Mey, E. (1994*a*) Beziehungen zwischen Larvenmorphologie und Systematik der Adulti bei den Vogel-Ischnozeren (Insecta, Phthiraptera, Ischnocera). *Mitteilungen aus dem zoologische Museum in Berlin*, **70**: 3–84. <https://doi.org/10.1002/mmnz.19940700102>.

Mey, E. (1994*b*) In memoriam Wolfdietrich Eichler (1912–1994). *Rudolstädter naturhistorische Schriften*, **6**: 107–108.

Mey, E. (1998*a*) Zur Taxonomie, Lebensweise und parasitophyletischen Evidenz der Federlingsgattung *Struthiolipeurus* sensu lato (Insecta, Phthiraptera, Ischnocera). *Mitteilungen aus der Museum für Naturkunde Berlin*, *Zoologische Reihe*, **74**: 65–93. <https://doi.org/10.1002/mmnz.4850740108>.

Mey, E. (1998*b*) Über den Artbegriff bei Mallophagen (Insecta: Phthiraptera). *Zoologische Abhandlungen Staatliches Museum für Tierkunde Dresden*, **50** (Supplement): 77–85.

Mey, E. (1999) Phylogenetic relationships of the Megapodiidae as indicated by their ischnoceran, in particular goniodid, chewing lice (Insecta: Phthiraptera). *In:* R. Dekker, D. Jones & J. Benshemesh (ed.), *Proceedings of the Third International Megapode Symposium*, Leiden (Zoologische Verhandlungen): 23–35.

Mey, E. (2004*a*) Zur Taxonomie, Verbreiting und parasitophyletischer Evidenz des *Philopterus*-Komplexes (Insecta, Phthiraptera, Ischnocera). *Ornithologischer Anzeiger*, **43**: 149–203.

Mey, E. (2004*b*) In memoriam Jadwiga Złotorzycka (1926–2002). *Rudolstädter naturhistorische Schriften*, **12**: 195–196.

Mey, E. (2007) Schriftenschau. Price, R. D., R. A. Hellenthal, R. L. Palma, K. P. Johnson & D. H. Clayton (eds., 2003): *The chewing lie: world checklist and biological overview*. *Rudolstädter naturhistorische Schriften*, **14**: 92–96.

Mey, E. (2009) Die Mallophagen (Insecta, Phthiraptera: Amblycera & Ischnocera) der Galloanseres (Aves)—ein Überblick. *Beiträge zur Jagd- und Wildforschung*, **34**: 151–187.

Mey, E. (2010) *Nesiotinus kerguelensis* n. sp.—ein Federling (Phthiraptera, Ischnocera, Philopteridae) vom Lummensturmvogel *Pelecanoides urinatrix exsul* Salvin von den subantarktischen Kerguelen, nebst Anmerkungen zur Gattung *Nesiotinus* Kellogg. *Rudolstädter naturhistorische Schriften*, **17**: 77–94.

Mey, E. (2017) Neue Gattungen und Arten aus dem *Brueelia*-Komplex (Insecta, Phthiraptera, Ischnocera, Philopteridae s. l.). *Rudolstädter Naturhistorische Schriften,* '2016', **22**: 85–215.

Mey, E. (2020) Notes on the descriptions of some *Philopterus* species (Insecta, Phthiraptera, Ischnocera, Philopteridae s.l.) of reed warblers (Acrocephalidae), kinglets (Regulidae) and tits (Paridae): a response. *Vernate*, **39**: 153–167.

Mey, E. (2021) The *Corvonirmus* group (Insecta, Psocodea, Phthiraptera, Ischnocera) of corvids (Aves, Corvidae). I. *Stubbenirmus* gen. nov. *Erforschung biologischer Ressourcen der Mongolei*, **14**: 399–438.

Mizukoshi, A., Johnson, K. P. & Yoshizawa, K. (2012) Co-phylogenetic and morphological evolution of sika deer lice (*Damalinia sika*) with their hosts (*Cervus nippon*). *Parasitology*, **139**: 1614–1629. <https://doi.org/10.1017/S0031182012000996>.

Mjöberg, E. (1910) Studien über Mallophagen und Anopluren. *Arkiv för Zoologi*, **6**: 1–296, 5 pl. <https://doi.org/10.5962/bhl.part.26907>.

Monckton, S. K., Johal, S. & Packer, L. (2020) Inadequate treatment of taxonomic information prevents replicability of most zoological research. *Canadian Journal of Zoology*, **98**: 633–642. <https://doi.org/10.1139/cjz-2020-0027>.

Moyer, B. R., Rock, A. N. & Clayton, D. H. (2003) Experimental test of the importance of preen oil in rock doves (*Columba livia*). *Auk*, **120**: 490–496. <https://doi.org/10.2307/4090201>.

Møller, A. P., Erritzøe, J. & Rózsa, L. (2010) Ectoparasites, uropygial glands and hatching success in birds. *Oecologia*, **163**: 303–311. <https://doi.org/10.1007/s00442-009-1548-x>.

Møller, A. P. & Rózsa, L. (2005) Parasite biodiversity and host defenses: chewing lice and immune response of their avian hosts. *Ecophysiology*, **142**: 169–176. <https://doi.org/10.1007/s00442-004-1735-8>.

Müller, P. L. S. (1776) *Des Ritters Carl von Linné Königlich Schwedischen Leibarztes Vollständiges Natursystem: Supplements un Register-Band über alla sechs Theile oder Classen des Thierreichs mit einer ausführlichen Erklärung ausgefertiget.* Nürnberg (Gabriel Nicolaus Raspe): 1–536.

Najer, T., Papousek, I., Adam, C., Trnka, A., Quach, V. T., Nguyen, C. N., Figura, R., Literak, I. & Sychra, O. (2020*a*) New records of *Philopterus* (Ischnocera: Philopteridae) from Acrocephalidae and Locustellidae, with description of one new species from Regulidae. *European Journal of Taxonomy*, **632**: 1–37. <https://doi.org/10.5852/ejt.2020.632>.

Najer, T., Papousek, I., Sychra, O., Sweet, A. D. & Johnson, K. P. (2020*b*) Combining nuclear and mitochondrial loci provides phylogenetic information in the *Philopterus* complex of lice (Psocodea: Ischnocera: Philopteridae). *Journal of medical Entomology*, **58**: 252–260. <https://doi.org/10.1093/jme/tjaa166>.

Naz, S., Najer, T. & Gustafsson, D. R. (2020) An annotated list of the species of lice (Insecta: Phthiraptera) described by Mohammad A.-R. Ansari. *Zootaxa*, **4809**: 401–448. <https://doi.org/10.11646/zootaxa.4809.3.1>.

Naz, S. & Rizvi, S. A. (2016) A new species of genus *Menacanthus* Neumann, 1912 (Phthiraptera: Amblycera: Menoponidae) on *Gallus gallus* L. from Sindh, Pakistan. *International Journal of advanced Research in biological Sciences*, **3**: 142–148.

Nelson, B. C. (1971) Successful rearing of *Colpocephalum turbinatum* (Phthiraptera). *Nature New Biology*, **232**: 255. <https://doi.org/10.1038/newbio232255a0>.

Nelson, B. C. (1972) A revision of the New World species of *Ricinus* (Mallophaga) occurring on Passeriformes (Aves). *University of California Publications in Entomology*, **68**: i–v + 1–175.

Neumann, L. G. (1906) Notes sur les Mallophages. I. Nomenclature. *Bulletin de la Société zoologique de France*, **31**: 54–60. <https://doi.org/10.5962/bhl.part.18334>.

Neumann, L. G. (1912) Notes sur les Mallophages. II. *Archives de Parasitologie*, **15**: 353–384.

Nitzsch, C. L. (1818) Die Familien und Gattungen der Thierinsekten (Insecta epizoica); als Prodromus einer Naturgeschechte derselben. *Magazin der Entomologie*, **3**: 261–316.

Odening, K. (1983) Einige Gedanken zum Thema Parasitismus und Evolution. *Biologische Rundschau*, **21**: 93–102.

Olsen, C. M. (2003) *Gulls of Europe, Asia and North America*. London (Christopher Helm): 1–608.

Olson, S. L. & Feduccia, A. (1980) Relationships and evolution of flamingos (Aves: Phoenicopteridae). *Smithsonian Contributions to Zoology*, **316**: 1–73. <https://doi.org/10.5479/si.00810282.316>.

Oniki, Y. & Butler, J. F. (1989) The presence of mites and insects in the gut of two species of chewing lice (*Myrsidea* sp. and *Philopterus* sp., Mallophaga): accident or predation? *Revista brasileira de Biología*, **49**: 1013–1016.

Owen, J. O., Nelson, A. C. & Clayton, D. H. (2010) Ecological immunology of bird-ectoparasite studies. *Trends in Parasitology*, **26**: 530–539. <https://doi.org/10.1016/j.pt.2010.06.005>.

Packer, L., Monckton, S. K., Onuferko, T. M. & Ferrari, R. R. (2018) Validating taxonomic identifications in entomological research. *Insect Conservation and Diversity*, **11**: 1–12. <https://doi.org/10.1111/icad.12284>.

Paine, J. H. & Mann, W. M. (1913) Mallophaga from Brazilian birds. *Psyche*, **20**: 15–23. <https://doi.org/10.1155/1913/70596>.

Páll-Gergely, B., Hunyadi, A. & Auffenberg, K. (2020) Taxonomic vandalism in malacology: comments on molluscan taxa recently described by N. N. Thach and colleagues (2014–2019). *Folia malacologia*, **28**: 35–76. <https://doi.org/10.12657/folmal.028.002>.

Palma, R. L. (1994) The identity of *Nirmus obtusus* and other *Quadraceps* species (Phthiraptera: Philopteridae) from Clipperton Island and the Galápagos Islands. *Journal of the royal Society of New Zealand*, **24**: 267–276. <https://doi.org/10.1080/03014223.1994.9517471>.

Palma, R. L. (2017) Phthiraptera (Insecta). A catalogue of parasitic lice from New Zealand. *Fauna of New Zealand Ko te Aitanga Pepeke o Aotearoa*, **76**, Wellington (Landcare Research New Zealand Ltd.): 1–400.

Palma, R. L. & Price, R. D (2006) Lice of the genus *Philopterus* Nitzsch (Phthiraptera: Ischnocera: Philopteridae) parasitic on hosts of the genus *Emberiza* (Passeriformes: Emberizidae). *New Zealand Journal of Zoology*, **33**: 1–6. <https://doi.org/10.1080/03014223.2006.9518424>.

Paterson, A. M., Palma, R. L. & Gray, R. D. (1999) How frequently do avian lice miss the boat? Implications for coevolutionary studies. *Systematic Biology*, **48**: 214–223. <https://doi.org/10.1080/106351599260544>.

Peters, H. S. (1928) Mallophaga from Ohio birds. *Ohio Journal of Science*, **28**: 215–228.

Piaget, E. (1871) Description de quelques parasites du genre *Docophorus*. *Tijdschrift voor Entomologie*, **14**: 113–137.

Platnick, N. I., Dupérré, N., Berniker, L. & Bonaldo, A. B. (2013) The goblin spider genera *Prodysderina, Aschnaoonops* and *Bidysderina* (Araneae, Oonopidae). *Bulletin of the American Museum of natural History*, **373**: 1–102. <https://doi.org/10.1206/822.1>.

Popinga, A., Demastes, J. W., Spradling, T. A., Hafner, D. J. & Hafner, M. S. (2019) Host-parasite associations of the *Cratogeomys fumosus* species group and their chewing lice, *Geomydoecus*. *Therya*, **10**: 81–89. <https://doi.org/10.12933/therya-19-739>.

Price, R. D. (1970) A review of the genus *Heleonomus* (Mallophaga: Menoponidae) from the cranes. *Annals of the entomological Society of America*, **63**: 1162–1174. <https://doi.org/10.1093/aesa/63.4.1162>.

Price, R. D. (1971) A review of the genus *Holomenopon* (Mallophaga: Menoponidae) from the Anseriformes. *Annals of the entomological Society of America*, **64**: 633–646. <https://doi.org/10.1093/aesa/64.3.633>.

Price, R. D. (1972) Host records for *Geomydoecus* (Mallophaga: Trichodectidae) from the *Thomomys bottae-umbrinus* complex (Rodentia: Geomyidae). *Journal of medical Entomology*, **9**: 537–544. <https://doi.org/10.1093/jmedent/9.6.537>.

Price, R. D. (1974) A review of the genus *Pseudomenopon* (Mallophaga: Menoponidae). *Annals of the entomological Society of America*, **67**: 73–84. <https://doi.org/10.1093/aesa/67.1.73>.

Price, R. D. (1975) The *Menacanthus eurysternus* complex (Mallophaga: Menoponidae) of the Passeriformes and Piciformes (Aves). *Annals of the entomological Society of America*, **68**: 617–622. <https://doi.org/10.1093/aesa/68.4.617>.

Price, R. D. (1977) The *Menacanthus* (Mallophaga: Menoponidae) of the Passeriformes (Aves). *Journal of medical Entomology*, **14**: 207–220. <https://doi.org/10.1093/jmedent/14.2.207>.

Price, R. D. & Beer, J. R. (1963*a*) Species of *Colpocephalum* (Mallophaga: Menoponidae) parasitic upon the Falconiformes. *Canadian Entomologist*, **95**: 731–763. <https://doi.org/10.4039/Ent95731-7>.

Price, R. D. & Beer, J. R. (1963*b*) The *Kurodaia* (Mallophaga: Menoponidae) parasitic on the Strigiformes, with a key to the species of the genus. *Annals of the entomological Society of America*, **56**: 849–857. <https://doi.org/10.1093/aesa/56.6.849>.

Price, R. D. & Beer, J. R. (1964) Species of *Colpocephalum* (Mallophaga: Menoponidae) parasitic upon the Galliformes. *Annals of the entomological Society of America*, **57**: 391–402. <https://doi.org/10.1093/aesa/57.4.391>.

Price, R. D. & Beer, J. R. (1965) The *Colpocephalum* (Mallophaga: Menoponidae) of the Ciconiiformes. *Annals of the entomological Society of America*, **58**: 111–131. <https://doi.org/10.1093/aesa/58.1.111>.

Price, R. D. & Beer, J. R. (1967) The genus *Heteromenopon* (Mallophaga: Menoponidae), with description of a new subgenus and six new species. *Annals of the entomological Society of America*, **60**: 328–338. <https://doi.org/10.1093/aesa/60.2.328>.

Price, R. D. & Clayton, D. H. (1983) A review of the genus *Psittaconirmus* (Mallophaga: Philopteridae) from South Pacific parrots (Psittaciformes). *International Journal of Entomology*, **25**: 56–70.

Price. R. D. & Emerson, K. C. (1971) A revision of the genus *Geomydoecus* (Mallophaga: Trichodectidae) of the New World pocket gophers (Rodentia: Geomyidae). *Journal of medical Entomology*, **8**: 228–257. <https://doi.org/10.1093/jmedent/8.3.228>.

Price, R. D. & Hellenthal, R. A. (1981) A review of the *Geomydoecus californicus* complex (Mallophaga: Trichodectidae) from *Thomomys* (Rodentia: Geomyidae). *Journal of medical Entomology*, **18**: 1–23. <https://doi.org/10.1093/jmedent/18.1.1>.

Price, R. D. & Hellenthal, R. A. (1989) *Geomydoecus* (Mallophaga: Trichodectidae) from *Pappogeomys* and *Zygogeomys* pocket gophers (Rodentia: Geomyidae) in central Mexico. *Journal of medical Entomology*, **26**: 385–401. <https://doi.org/10.1093/jmedent/26.5.385>.

Price, R. D. & Hellenthal, R. A. (2005) A new genus and new species of chewing louse (Phthiraptera: Menoponidae) from the lesser Melampitta (Aves: Passeriformes). *Journal of the Kansas entomological Society*, **78**: 167–171. <https://doi.org/10.2317/0406.01.1>.

Price, R. D., Hellenthal, R. A. & Dalgleish, R. C. (2002) A review of *Machaerilaemus* (Phthiraptera: Amblycera: Menoponidae) from the Passeriformes (Aves), with the description of five new species. *American Midland Naturalist*, **148**: 61–74. <https://doi.org/10.1674/0003-0031(2002)148[0061:AROMPA]2.0.CO;2>.

Price, R. D., Hellenthal R. A., Palma, R. L. (2003) World checklist of chewing lice with host associations and keys to families and genera. *In*: R. D. Price, R. A. Hellenthal, R. L., Palma, K. P. Johnson & D. H.Clayton, *The chewing lice: world checklist and biological overview*, *Illinois Natural History Survey Special Publications* **24**, Champaign, Illinois (Illinois Natural History Survey): i–x + 1–501.

Price, R. D., Johnson, K. P. & Palma, R. L. (2008) A review of the genus *Forficuloecus* Conci (Phthiraptera: Philopteridae) from parrots (Psittaciformes: Psittacidae), with descriptions of four new species. *Zootaxa*, **1859**: 49–62. <https://doi.org/10.11646/zootaxa.1859.1.3>.

Prŷs-Jones, R. P. (2022) Radiographic analysis of Meinertzhagen's redpoll specimens: testing a purported case of fraud. *Bulletin of the British Ornithologists' Club*, **142**: 244–253. <https://doi.org/10.25226/bboc.v142i2.2022.a9>.

Rasmussen, P. C. (2005) On producing *Birds of South Asia*. *Indian Birds*, **1**: 50–56.

Rasmussen, P. C. & Collar, N. J. (1999) Major specimen fraud in the forest owlet *Heteroglaux* (*Athene auct.*) *blewitti*. *Ibis*, **141**: 11–21. <https://doi.org/10.1111/j.1474-919X.1999.tb04258.x>.

Rasmussen, P. C. & Prŷs-Jones, R. P. (2003) History *vs.* mystery: the reliability of museum specimen data. *Bulletin of the British Ornithologists' Club*, **123A**: 66–94.

Reddy, S., Kimball, R. T., Pandey, A., Hosner, P. A., Braun, M. J., Hackett, S. J., Han, K.-L., Hardman, J., Huddleston, C. J., Kingston, S., Marks, B. D., Miglia, K. J., Moore, W. S., Sheldon, F. H., Witt, C. C., Yuri, T. & Braun, E. L. (2017) Why do phylogenomic data sets yield conflicting trees? Data type influences the avian tree of life more than taxon sampling. *Systematic Biology*, **66**: 857–879. <https://doi.org/10.1093/sysbio/syx041>.

Reed, D. L. & Hafner, M. S. (1997) Host specificity of chewing lice on pocket gophers: a potential mechanism for cospeciation. *Journal of Mammalogy*, **78**: 655–660. <https://doi.org/10.2307/1382916>.

Reed, D. L., Hafner, M. S. & Allen, S. K. (2000) Mammalian hair diameter as a possible mechanism for host specialization in chewing lice. *Journal of Mammalogy*, **81**: 999–1007. <https://doi.org/10.1644/1545-1542(2000)081<0999:MHDAAP>2.0.CO;2>.

Reischütz, P. L. (1994) Ist Starobogatovismus die Steigerung von Bourguignatismus? *Nachrichtblatt der Ersten Vorarlberger Malakologischen Gesellschaft*, **2**: 51–52.

Rem, R. & Złotorzycka, J. (1974) Zur Lebensweise des blassen Haustaubenfederlings *Bonomiella columbae*. *Angewandte Parasitologie*, **17**: 215–217.

Rem, R. & Złotorzycka, K. (1981) An experimental study of the survival rate of some Mallophaga outside of *Columba livia dom.* Body. *Acta parasitologica polonica,* **28**: 179–185.

Reneerkens, J., Piersma, T. & Sinninghe Damasté, J. S. (2002) Sandpipers (Scolopacidae) switch from mono- to diester preen waxes during courtship and incubation, but why? *Proceedings of the royal Society of London*, (B), *Biological Sciences*, **269**: 2135–2139. <https://doi.org/10.1098/rspb.2002.2132>.

Rensch, B. (1948) Histological changes correlated with evolutionary changes of body size. *Evolution*, **2**: 218–230. <https://doi.org/10.2307/2405381>.

Rheinwald, G. (1968) Die Mallophagengattung *Ricinus* De Geer, 1778. Revision der außeramerikanischen Arten. *Mitteilungen der Hamburger zoologische Museum Institut*, **65**: 181–326.

Richmond, C. W. (1905) New generic name for the giant fulmar. *Proceedings of the biological Society of Washington*, **18**: 76.

Rózsa, L. (1991) Flamingo lice contravene Fahrenholz. *International Journal for Parasitology*, **21**: 151–152. <https://doi.org/10.1016/0020-7519(91)90003-P>.

Rózsa, L. (1993) Speciation patterns of ectoparasites and 'straggling' lice. *International Journal for Parasitology*, **23**: 859–864. <https://doi.org/10.1016/0020-7519(93)90050-9>.

Rózsa, L., Rékási, J. & Reiczigel, J. (1996) Relationship of host coloniality to the population ecology of avian lice (Insecta: Phthiraptera). *Journal of animal Ecology*, **65**: 242–248. <https://doi.org/10.2307/5727>.

Rózsa, L., Tryjanowski, P. & Vas, Z. (2015) Under the changing climate: how shifting geographical distributions and sexual selection shape parasite diversification. *In:* S. Morand, B. Krasnov & T. Littlewood (ed.), *Parasite diversity and diversification: evolutionary ecology meets phylogenetics*, Cambridge, U. K. (Cambridge University Press): 58–76. <https://doi.org/10.1017/CBO9781139794749.007>.

Rózsa, L. & Vas, Z. (2015) Co-extinct and critically co-endangered species of parasitic lice, and conservation-induced extinction: should lice be reintroduced with their hosts? *Oryx*, **49**: 107–110. <https://doi.org/10.1017/S0030605313000628>.

Ryder, W. D. (1967) The dispersal of certain species of Mallophaga which infest the domestic fowl, *Gallus domesticus*. *Journal of applied Ecology*, **4**: 309–323. <https://doi.org/10.2307/2401338>.

Samšiňák, K. (1971) Die auf *Carabus*-Arten (Coleoptera, Adephaga) der palaearktische Region lebenden Milben der Unterordnung Acariformes (Acari); ihre Taxonomie und Bedeutung für die Lösung zoogeographischer, entwicklungsgeschichtilcher und parasitophyletischer Fragen. *Entomologische Abhandlungen der Museum für Tierkunde in Dresden*, **38**: 145–234.

Saxena, A. K. & Agarwal, G. P. (1983) *In vitro* rearing of Mallophaga. *Angewandte Parasitologie*, **24**: 178–186.

Schrank, F. von P. (1803) *Fauna boica*. *Durchgedachte Geschichte der in Baiern einheimischen und zahmen Thiere.* Dritten und lezten Bandes, erste Abtheilung. Landshut, Germany (P. Krull): i–viii + 1–272.

Smith, V. S., Light, J. E. & Durden, L. A. (2008) Rodent louse diversity, phylogeny, and cospeciation in the Manu Biosphere Reserve, Peru. *Biological Journal of the Linnean Society*, **95**: 598–610. <https://doi.org/10.1111/j.1095-8312.2008.01069.x>.

Smith, W. A., Oakeson, K. F., Johnson, K. P., Reed, D. L., Carter, T., Smith, K. L., Koga, R., Fukatsu, T., Clayton, D. H. & Dale, C. (2013) Phylogenetic analysis of symbionts in feather-feeding lice of the genus *Columbicola*: evidence for repeated symbiont replacements. *BMC evolutionary Biology*, **13** [109]: [1–15]. <https://doi.org/10.1186/1471-2148-13-109>.

Swainson, W. (1832) *Fauna boreali-americana, or, The zoology of the northern parts of British America: containing descriptions of the objects of natural history collected on the late northern land expeditions under command of Captain Sir John Franklin, R.N.* Part second, *The birds.* London (John Murray): i–lxvi + 1–523.

Swainson, W. (1837) *On the natural history and classification of birds.* Volume **2**. London (Longman): i–vi + 1–398. <https://doi.org/10.5962/bhl.title.64988>.

Sweet, A. D., Boyd, B. M. & Johnson, K. P. (2016) Cophylogenetic patterns are uncorrelated between two lineages of parasites on the same hosts. *Biological Journal of the Linnean Society*, **118**: 813–828. <https://doi.org/10.1111/bij.12771>.

Sweet, A. D., Boyd, B. M., Allen, J. M., Villa, S. M., Valim, M. P., Rivera-Parra, J. L., Wilson, R. E. & Johnson, K. P. (2017*b*) Integrating phylogenomic and population genomic patterns in avian lice provides a more complete picture of parasite evolution. *Evolution*, **72**: 95–112. <https://doi.org/10.1111/evo.13386>.

Sweet, A. D., Bush, S. E., Gustafsson, D. R., Allen, J. M., DiBlasi, E., Skeen, H. R., Weckstein, J. D. & Johnson, K. P. (2018) Host and parasite morphology influence congruence between host and parasite phylogenies. *International Journal for Parasitology*, **48**: 641–648. <https://doi.org/10.1016/j.ijpara.2018.01.007>.

Sweet, A. D., Chesser, R. T. & Johnson, K. P. (2017) Comparative cophylogenetics of Australian phabine pigeons and doves (Aves: Columbidae) and their feather lice (Insecta: Phthiraptera). *International Journal for Parasitology*, **47**: 347–356. <https://doi.org/10.1016/j.ijpara.2016.12.003>.

Sweet, A. D. & Johnson, K. P. (2016) Cophylogenetic analysis of New World ground-doves (Aves: Columbidae) and their parasitic wing lice (Insecta: Phthiraptera: *Columbicola*). *Molecular Phylogenetics and Evolution*, **103**: 122–132. <https://doi.org/10.1016/j.ympev.2016.07.018>.

Sychra, O., Harmat, P. & Literák, I. (2008) Chewing lice (Phthiraptera) on chickens (*Gallus gallus*) from small backyard flocks in the eastern part of Czech Republic. *Veterinary Parasitology*, **152**: 344–348. <https://doi.org/10.1016/j.vetpar.2008.01.001>.

Sychra, O., Sychrova, V. & Literák, I. (2008) Identity of *Menacanthus orbteli* Balát (Phthiraptera: Menoponidae) from the Savi's warbler (Passeriformes: Sylviidae). *Biologia*, **63**: 686–688. <https://doi.org/10.2478/s11756-008-0133-9>.

Sychra, O., Najer, T., Kounek, F., Hung, N. M. & Tolstenkov, O. O. (2014*a*) *Myrsidea claytoni* (Phthiraptera: Menoponidae) from *Cymbirhynchus macrorhynchus* (Passeriformes: Eurylaimidae): a case of natural host switching. *Journal of Parasitology*, **100**: 280–283. <https://doi.org/10.1645/13-385.1>.

Sychra, O., Kounek, F., Papousek, I., Capek, M., Cárdenas-Callirgos, J. M., Franco, S. & Literák, I. (2014*b*) Chewing lice (Phthiraptera: Amblycera et Ischnocera) from wrens (Passeriformes: Troglodytidae), with descriptions of a new species of *Mursidea*. *Acta entomologica Musei nationalis Pragae*, **54**: 1–27.

Sykes, W. H. (1832) Catalogue of birds of the raptorial and insessorial orders (systematically arranged,) observed in the Dukhun. *Proceedings of the Committee of Science and Correspondence of the zoological Society of London*, **2**: 77–99.

Takano, O. M., Voelker, G., Gustafsson, D. R. & Light, J. E. (2019) Molecular phylogeny and novel host associations of avian chewing lice (Insecta: Phthiraptera) from South Africa. *Systematic Entomology*, **44**: 289–304. <https://doi.org/10.1111/syen.12319>.

Tandan, B. K. & Dhanda, V. (1963) *Falcolipeurus josephi*, a new American Mallophagan from caracaras of the genus *Polyborus*, and a key to allied species (Ischnocera: Philopteridae). *Annals of the entomological Society of America*, **63**: 634–639. <https://doi.org/10.1093/aesa/56.5.634>.

Tandan, B. K. & Hajela, K. P. (1962) The identity of *Abumarkub koenigi* Eichler, 1959 (Insecta: Mallophaga). *Annals and Magazine of natural History*, (13), **5**: 319–320, 1 pl. <https://doi.org/10.1080/00222936208651251>.

Taschenberg, O. (1882) Die Mallophagen mit besonderer Berücksichtigung der von Dr. Meyer gesammelten Arten. *Nova Acta Academiae Caesareae Leopoldino-Carolinae Germanicae Naturae Cursorium*, **64**: 1–231, 7 pl. <https://doi.org/10.5962/bhl.title.82513>.

Temminck, C. J. (1823) *Nouveau recueil de planches coloriées d'oiseaux: pour servir de suite et de complément aux planches enluminées de Buffon, édition in-folio et in-4º de l'Imprimerie royale, 1770.* Strasbourg (Legras Imbert et Comp.): Livraison 40, pl. 236 [unpaginated].

Temminck, C. J. (1830) *Nouveau recueil de planches coloriées d'oiseaux: pour servir de suite et de complément aux planches enluminées de Buffon, édition in-folio et in-4º de l'Imprimerie royale, 1770.* Strasbourg (Legras Imbert et Comp.): Livraison 85, pl. 503 [unpaginated].

Temminck, C. J. (1835) *Nouveau recueil de planches coloriées d'oiseaux: pour servir de suite et de complément aux planches enluminées de Buffon, édition in-folio et in-4º de l'Imprimerie royale, 1770.* Strasbourg (Legras Imbert et Comp.): Livraison 93, pl. 551 [unpaginated].

Tian, C., Yu, X., Wang, Z., Zou, F. & Gustafsson, D. R. (2022) Phylogenetic relationships of *Guimaraesiella* and *Priceiella* (Phthiraptera: Ischnocera) from babblers and non-babblers (Passeriformes). *Journal of Parasitology*, **108**: 107–121. <https://doi.org/10.1645/21-91>.

Timm, R. M. (1983) Fahrenholz' rule and resource tracking: a study of host-parasite coevolution. *In*: M. H. Nitecki (ed.), *Coevolution*, Chicago (University of Chicago Press): 225–265.

Timmermann, G. (1936) *Saemundssonia* nov. gen., ein neues Mallophagengenus, aufgestellt für *Philopterus gonothorax* (Giebel) und verwandte Arten. *Zoologischer Anzeiger*, **114**: 97–100.

Timmermann, G. (1949) Beiträge zur Kenntnis der Ektoparasiten-Fauna isländischer Säugetiere und Vögel. 1. Mitteilung. Das Mallophagengenus *Saemundssonia* Timmermann, 1936. *Visindafélag Íslendinga*, **2**: 1–32.

Timmermann, G. (1951) Investigations on some ischnoceran bird lice (genus *Saemundssonia*) parasitic on waders. *Annals and Magazine of natural History*, (12), **4**: 390–401. <https://doi.org/10.1080/00222935108654164>.

Timmermann, G. (1957) Studien zu einer vergleichenden Parasitologie der Charadriiformes oder Regenpfeifervögel. Teil 1: Mallophaga. *Parasitologische Schriftenreihe*, **8**: 1–204.

Timmermann, G. (1965) Die Federlingsfauna der Sturmvögel und die Phylogenese des procellariiformen Vogelstammes. *Abhandlungen und Verhandlungen des Naturwissenschaftlischen Vereins in Hamburg*, *Neue Folge*, **8** (Supplement): 1–249.

Timmermann, G. (1966) *Haffneia* nov. gen., ein neues Mallophagengenus von Raubmöwen. *Mitteilungen der Hamburger zoologische Museum Institut*, **63**: 85–89.

Timmermann, G. (1971) 'Regelwidrigkeiten' im Ausbretungsbild bei Vogelmallophagen (erläutert an den Kletterfederlinge der Watvögel und Möwen). *Mitteilungen der Hamburger zoologische Museum Institut*, **67**: 135–174.

Tompkins, D. M. & Clayton, D. H. (1999) Host resources govern the specificity of swiftlet lice: size matters. *Journal of animal Ecology*, **68**: 489–500. <https://doi.org/10.1046/j.1365-2656.1999.00297.x>.

Toon, A. & Hughes, J. M. (2008) Are lice good proxies for host history? A comparative analysis of the Australian magpie, *Gymnorhina tibicen*, and two species of feather louse. *Heredity*, **101**: 127–135. <https://doi.org/10.1038/hdy.2008.37>.

Tryjanowski, P., Szczykutowicz, A. & Adamski, Z. (2007) Size variation in chewing lice *Docophorulus coarctatus*: how host size and louse population density vary together. *Evolutionary Ecology*, **21**: 739–749. <https://doi.org/10.1007/s10682-006-9148-2>.

Tryjanowski, P., Adamski, Z., Dylewska, M., Bulkail, L. & Rózsa, L. (2009) Demographic correlates of sexual size dimorphism and male genital size in the lice *Philopterus coarctatus*. *Journal of Parasitology*, **95**: 1120–1124. <https://doi.org/10.1645/GE-1966.1>.

Tuinen, M. van, Butvill, D. B., Kirsch, J. A. W. & Hedges, S.B. (2001) Convergence and divergence in the evolution of aquatic birds. *Proceedings of the royal Society of London*, (B), **268**: 1345–1350. <https://doi.org/10.1098/rspb.2001.1679>.

Uchida, S. (1948) Studies on the biting-lice (Mallophaga) of Japan and adjacent territories (suborder Ischnocera Pt. I). *Japanese medical Journal*, **1**: 303–326. <https://doi.org/10.7883/yoken1948.1.303>.

Valim, M. P. & Weckstein, J. D. (2012) A new genus and species of Philopteridae (Phthiraptera: Ischnocera) from the trumpeters (Aves: Gruiformes: Psophiidae). *Journal of Parasitology*, **98**: 728–734. <https://doi.org/10.1645/GE-3055.1>.

Vas, Z., Csorba, G. & Rózsa, L. (2012) Evolutionary co-variation of host and parasite diversity—the first test of Eichler's rule using parasitic lice (Insecta: Phthiraptera). *Parasitology Research*, **111**: 393–401. <https://doi.org/10.1007/s00436-012-2850-9>.

Villa, S. M., Campbell, H. E., Bush, S .E. & Clayton, D. H. (2016) Does antiparasite behavior improve with experience? An experimental test of the priming hypothesis. *Behavioral Ecology,* **27**: 1167–1171. <https://doi.org/10.1093/beheco/arw032>.

Villa, S. M., Evans, M. D., Subhani, Y. K., Altuna, J. C., Bush, S. E. & Clayton, D. H. (2018) Body size and fecundity are correlated in feather lice (Phthiraptera: Ischnocera): implications for Harrison's rule. *Ecological Entomology*, **43**: 349–396. <https://doi.org/10.1111/een.12511>.

Villa, S. M., Altuna, J. C., Ruff, J. S., Beach, A. B., Mulvey, L. I., Poole, E. J., Campbell, H. E., Johnson, K. P., Shapiro, M. D., Bush, S. E. & Clayton, D. H. (2019) Rapid experimental evolution of reproductive isolation from a single natural population. *Proceedings of the national Academy of Sciences of the United States*, **116**: 13440–13445. <https://doi.org/10.1073/pnas.1901247116>.

Wagler, J. G. (1831) Einige Mittheilungen über Thiere Mexicos. *Isis von Oken*, **24**: 510–535.

Wappler, T., Smith, V. S. & Dalgleish, R. C. (2004) Scratching an ancient itch: an Eocene bird louse fossil. *Proceedings of the royal Society of London*, (B), **271**: 5255–5258. <https://doi.org/10.1098/rsbl.2003.0158>.

Waterston, J. (1915) On two new species of Mallophaga (Menoponidae): *Menacanthus balfouri* n. sp. and *Myrsidea victrix* n. sp. from Colombia. *Entomologist's Monthly Magazine*, **51**: 12–16. <https://doi.org/10.5962/bhl.part.7786>.

Waterston, J. (1926) On the crop contents of certain Mallophaga. *Proceedings of the zoological Society*, **4**: 1017–1020. <https://doi.org/10.1111/j.1096-3642.1926.tb02231.x>.

Weckstein, J. (2004) Biogeography explains cophylogenetic patterns in toucan chewing lice. *Systematic Biology*, **53**: 154–164. <https://doi.org/10.1080/10635150490265085>.

Whiteman, N. K., Santiago-Alarcon, D., Johnson, K. P. & Parker, P. G. (2004) Differences in straggling rates between two genera of dove lice (Insecta: Phthiraptera) reinforce population genetic and cophylogenetic patterns. *International Journal for Parasitology*, **34**: 1113–1119. <https://doi.org/10.1016/j.ijpara.2004.06.003>.

Wüster, W., Thomson, S. A., O'Shea, M. & Kaiser, H. (2021) Confronting taxonomic vandalism in biology: conscientious community self-organization can preserve nomenclatural stability. *Biological Journal of the Linnean Society*, **133**: 645–670. <https://doi.org/10.1093/biolinnean/blab009>.

Yamagishi, A., Yao, I., Johnson, K. P. & Yoshizawa, K. (2014) Comparisons of host specificity in feather louse genera (Insecta: Phthiraptera: Philopteridae) parasitizing gulls (Aves: Laridae: *Larus*). *Zoological Science*, **31**: 383–389. <https://doi.org/10.2108/zs130263>.

Zhang, Z.-Q. (2010) In memory of Robert Campbell Dalgleish (1940–2009). *Zootaxa*, **2336**: 67–68. <https://doi.org/10.11646/zootaxa.2336.1.6>.

Złotorzycka, J. (1963*a*) *Larithophilus* gen. n. separated from *Actornithophilus* Ferris (Mallophaga) with a description of new and a review of known species. *Acta parasitologica polonica,* **11**: 223–228, 1 pl.

Złotorzycka, J. (1963*b*) Studien über Raubvogelfederlinge. I. *Trollipeurus* nov. gen., eine neue Mallophagengattung von Neuweltgeiern. *Angewandte Parasitologie*, **4**: 3–12.

Złotorzycka, J. (1964*a*) Mallophaga parasitizing Passeriformes and Pici. III. Philopterinae. *Acta parasitologica polonica*, **12**: 401–430, 4 pl.

Złotorzycka, J. (1964*b*) Mallophaga parasitizing Passeriformes and Pici. I. Subfamilies Dennyinae, Machaerilaeminae, Colpocephalinae. *Acta parasitologica polonica*, **12**: 165–102, pl. 1–4.

Złotorzycka, J. (1964*c*) Mallophaga parasitizing Passeriformes and Pici. II. Brueeliinae. *Acta parasitologica polonica*, **12**: 239–282, 4 pl. 1–4.

Złotorzycka, J. (1965) Mallophaga parasitizing Passeriformes and Pici. IV. Menacanthinae, Ricinidae, Degeeriellinae. *Acta parasitologica polonica*, **13**: 41–69, 2 pl.

Złotorzycka, J. (1967) Studien über *Quadraceps* s.l. (Mallophaga, Quadraceptinae). Übersicht der Arten und systematische Revision mit besondere Berücksichtigung der synhospitalen und allohsopitalen Arten. *Polskie Pismo Entomologiczne*, **37**: 705–785, 17 pl.

Złotorzycka, J. (1968*a*) Parasitophyletische Probleme bei den Mallophagen von Passeres und Pici. *Angewandte Parasitologie*, **9**: 97–119.

Złotorzycka, J. (1968*b*) Systematische Studien an den mitteleuropäischen Arten der Gattung *Austromenopon* Bedf. (Mallopjhaga, Austromenoponidae). *Polskie Pismo Entomologiczne*, **38**: 301–340.

Złotorzycka, J. (1970) Studien an den mitteleuropäischen Arten der Gattung *Anatoecus* Cumm. (Esthiopteridae, Mallophaga). *Polskie Pismo Entomologiczne*, **40**: 7–67.

Złotorzycka, J. (1972*a*) Klucze do Oznaczania Owadów Polski. Część 15. Wszoły - Mallophaga, Zeszyt 3. Nadrodzina Goniodoidea I Trichodectoidea. *Polskie Towarzystwo Entomologiczne*, **74**: 1–48.

Złotorzycka, J. (1972*b*) Klucze do Oznaczania Owadów Polski. Część 15. Wszoły - Mallophaga, Zeszyt 1. Część ogólna oraz nadrodziny Gyropodea I Laemobothrioidea. *Polskie Towarzystwo Entomologiczne*, **75**: 1–57.

Złotorzycka, J. (1973) Systematische Stellung und Wirt-Parasit-Beziehungen beim Myrsideen-Komplex der mitteleuropäischen Corviden. *Lounais-Hämeen Luonto*, **46**: 46–62.

Złotorzycka, J. (1974) Revision der Europäischen *Strigiphilini* (Mallophaga, Strigiphilinae). *Polskie Pismo Entomologiczne*, **44**: 319–358, 8 pl.

Złotorzycka, J. (1976) Klucze do Oznaczania Owadów Polski. Część 15. Wszoły - Mallophaga, Zeszyt 4. Nadrodzina Menoponoidea. *Polskie Towarzystwo Entomologiczne*, **88**: 1–189.

Złotorzycka, J. (1977) Klucze do Oznaczania Owadów Polski. Część 15. Wszoły - Mallophaga, Zeszyt 6. Nadrodzina Philopteroidea: Rodzina Philopteridae. *Polskie Towarzystwo Entomologiczne*, **98**: 1–124.

Złotorzycka, J. (1980) Klucze do Oznaczania Owadów Polski. Część 15. Wszoły - Mallophaga, Zeszyt 6. Nadrodzina Philopteroidea, rodziny: Meinertzhageniellidae, Lipeuridae, Degeeriellidae, Pseudonirmidae, Giebeliidae, Esthiopteridae i Acidoproctidae. *Polskie Towarzystwo Entomologiczne*, **116**: 1–202.

Złotorzycka, J. & Eichler, W. (1984) Notulae mallophagologicae. XIV. *Prunellides annae* nov. gen. et spec. von *Prunella modularis*. *Angewandte Parasitologie*, **25**: 219–221.

Złotorzycka, J. & Lucińska, A. (1975) Systematische Studien an europäische Arten der Gattungen *Philopterus* und *Docophorulus* (Mallophaga, Philopteridae). I. Teil, Die Gattung *Philopterus* Nitzsch. *Polskie Pismo Entomologiczne*, **45**: 547–563.

Złotorzycka, J. & Lucińska, A. (1976) Systematische Studien an europäische Arten der Gattungen *Philopterus* und *Docophorulus* (Mallophaga, Philopteridae). II. Teil, Die Gattung *Docophorulus* Eichler. *Polskie Pismo Entomologiczne*, **46**: 261–317.

Submitted: 19 May 2022. Accepted: 12 August 2022. Published: 20 September 2022.
Corresponding Editor: Alain Dubois.

Appendix 1.

Summary of bird louse genera that occur on more than one host order, which under Fahrenholz' rule would indicate a close relationship between the two orders. In cases where 2–3 louse genera are shared between two orders, this would indicate a 'certainty' that they are closely related, according to Hopkins' (1942) principle. Louse taxonomy and host associations follow Price *et al*. (2003), except for genera in the *Brueelia*-complex, which follow Gustafsson & Bush (2017), and the *Philopterus*-complex, which follow Mey (2004*a*). As some complexes have not been revised in recent decades, this means that *Picicola* Clay & Meinertzhagen, 1938, *Degeeriella* Neumann, 1906, *Rallicola* Johnston & Harrison, 1911*, Quadraceps* Clay & Meinertzhagen, 1939, and *Penenirmus* Clay & Meinertzhagen, 1938, as treated by Price *et al.* (2003), are here regarded as monophyletic. However, in some cases genetic data do not support the monophyly of some genera here treated as monophyletic (e.g., Catanach & Johnson 2015). Only cases where a genus has been confirmed from two host orders are included. Thus, host associations marked with a '?' in Price *et al.* (2003) are here ignored. (A) signifies amblyceran genera, whereas (I) signifies ischnoceran genera. See Adams *et al.* (2005) for notes on the only *Columbicola* known from a non-columbiform host; this record is not included here. Host phylogeny follows the 'Early bird II' tree of Reddy *et al*. (2017), but relationships between orders vary between data sets. Host classification follows Clements *et al*. (2021); note that the placement of some families differs between Clements *et al*. (2021) and Reddy *et al.* (2017). Specifically, the **Pelecaniformes** of Reddy *et al*. (2017) include the *Anhingidae*, *Fregatidae*, *Phalacrocoracidae* and *Sulidae* [**Suliformes** in Clements *et al.* (2021)] as well as the *Ciconiidae* [**Ciconiiformes** in Clements *et al*. (2021)]. Moreover, Reddy *et al.* (2017) included the *Bucconidae* and *Galbulidae* in **Piciformes**, but these are separated into the **Galbuliformes** by Clements *et al*. (2021). In these cases, we followed Clements *et al*. (2021), based on the placement of the family-level taxon in Reddy *et al*. (2017) for evaluations of monophyly of host groups. Host order relationships are listed as 'Monophyletic' only if, based on what is known today, all orders from which the given louse genus are known form a monophyletic group to the exclusion of all other host orders.

Louse genus	Host orders	Host order relationship
Acutifrons (I)	**Accipitriformes**, **Falconiformes**	Paraphyletic
Anaticola (I)	**Anseriformes**, **Phoenicopteriformes**	Paraphyletic
Anatoecus (I)	**Anseriformes**, **Phoenicopteriformes**	Paraphyletic
Ardeicola (I)	**Ciconiiformes**, **Pelecaniformes**	Paraphyletic
Austrogoniodes (I)	**Anseriformes**, **Sphenisciformes**	Paraphyletic
Austromenopon (A)	**Charadriiformes**, **Pelecaniformes**, **Phaethontiformes**, **Procellariiformes**	Paraphyletic
Brueelia (I)	**Passeriformes**, **Piciformes**	Paraphyletic
Ciconiphilus (A)	**Anseriformes**, **Ciconiiformes**, **Pelecaniformes**	Paraphyletic
Clayiella (I)	**Coraciiformes**, **Leptosomiformes**	Paraphyletic
Colpocephalum (A)	**Accipitriformes**, **Cariamiformes**, **Cathartiformes**, **Ciconiiformes**, **Columbiformes**, **Cuculiformes**, **Falconiformes**, **Galliformes**, **Gruiformes**, **Passeriformes**, **Pelecaniformes**, **Phoenicopteriformes**, **Piciformes**, **Psittaciformes**, **Strigiformes**, **Suliformes**	Paraphyletic
Craspedonirmus (I)	**Charadriiformes**, **Gaviiformes**	Paraphyletic
Craspedorrhynchus (I)	**Accipitriformes**, **Falconiformes**	Paraphyletic
Cuculiphilus (A)	**Accipitriformes**, **Cathartiformes**, **Cuculiformes**, **Opisthocomiformes**	Paraphyletic
Degeeriella (I)	**Accipitriformes**, **Falconiformes**	Paraphyletic

...Continued on the next page

APPENDIX 1. (Continued)

Louse genus	Host orders	Host order relationship
Echinophilopterus (I)	CORACIIFORMES, PSITTACIFORMES	Paraphyletic
Falcolipeurus (I)	ACCIPITRIFORMES, CATHARTIFORMES, FALCONIFORMES	Paraphyletic
Guimaraesiella (I)	PASSERIFORMES, TROGONIFORMES	Paraphyletic
Heptapsogaster (I)	CARIAMIFORMES, TINAMIFORMES	Paraphyletic
Kelerimenopon (A)	GALLIFORMES, PASSERIFORMES, PSITTACIFORMES	Paraphyletic
Kurodaia (A)	ACCIPITRIFORMES, FALCONIFORMES, STRIGIFORMES	Paraphyletic
Laemobothrion (A)	ACCIPITRIFORMES, CATHARTIFORMES, CICONIIFORMES, EURYPYGIFORMES, FALCONIFORMES, GRUIFORMES, OPISTHOCOMIFORMES, PELECANIFORMES, STRIGIFORMES	Paraphyletic
Menacanthus (A)	GALLIFORMES, MUSOPHAGIFORMES, PASSERIFORMES, PICIFORMES, TINAMIFORMES	Paraphyletic
Myrsidea (A)	PASSERIFORMES, PICIFORMES	Paraphyletic
Neopsittaconirmus (I)	FALCONIFORMES, PSITTACIFORMES	Paraphyletic
Nosopon (A)	ACCIPITRIFORMES, FALCONIFORMES	Paraphyletic
Pectinopygus (I)	PELECANIFORMES, SULIFORMES	Monophyletic
Penenirmus (I)	PASSERIFORMES, PICIFORMES	Paraphyletic
Picicola (I)	PASSERIFORMES, PICIFORMES	Paraphyletic
Pseudomenopon (A)	CHARADRIIFORMES, GRUIFORMES, PODICIPEDIFORMES	Paraphyletic
Quadraceps (I)	CHARADRIIFORMES, PELECANIFORMES	Paraphyletic
Rallicola (I)	APTERYGIFORMES, EURYPYGIFORMES, GRUIFORMES, CHARADRIIFORMES, CUCULIFORMES, PASSERIFORMES	Paraphyletic
Rhynonirmus (I)	CHARADRIIFORMES, CUCULIFORMES	Paraphyletic
Saemundssonia (I)	ANSERIFORMES, CHARADRIIFORMES, PHAETHONTIFORMES, PROCELLARIIFORMES	Paraphyletic
Struthiolipeurus (I)	RHEIFORMES, STRUTHIONIFORMES	Paraphyletic
Tinamotaecola (I)	CARIAMIFORMES, TINAMIFORMES	Paraphyletic
Trinoton (A)	ANSERIFORMES, PHOENICOPTERIFORMES	Paraphyletic

APPENDIX 2.

Here we list the genera placed in four complexes of ischnoceran lice, as well as their host order associations; more detailed classifications of hosts are only used in cases where more resolution is needed. Host groups follow those outlined in Fig. 1, which are in turn based on the phylogeny of Reddy *et al.* (2017). Host taxonomy follows Clements *et al.* (2021).

Data of the *Brueelia*-complex taken from Gustafsson & Bush (2017). Data of the *Philopterus*-complex taken from Mey (2004*a*) and Gustafsson *et al*. (2019*c*). Data of the *Rallicola*-complex taken from Clay (1953) and Valim & Weckstein (2012). Data of the *Degeeriella*-complex taken from Clay (1958), Mey (1993) and Gustafsson (2019). For all four complexes, unpublished data have also been included. Host associations follow Price *et al*. (2003), Mey (2004) and Gustafsson & Bush (2017).

Host group	*Brueelia*-complex	*Degeeriella*-complex	*Philopterus*-complex	*Rallicola*-complex
STRUTHIONIFORMES				
RHEIFORMES				
APTERYGIFORMES				*Aptericola*

...Continued on the next page

Appendix 2. (Continued)

Host group	*Brueelia*-complex	*Degeeriella*-complex	*Philopterus*-complex	*Rallicola*-complex
Casuariiformes				
Tinamiformes				
Anseriformes				
Galliformes		*Colinicola*, *Lagopoecus*, *Lerwoecus*, *Megapodiella*		
Phoenicopteriformes				
Podicipediformes				
Columbiformes				
Mesitornithiformes		*Nakicola*		
Pterocliformes		*Syrrhaptoecus*		
Otidiformes				
Cuculiformes	*Couala*	*Cuculicola*	*Cuculoecus*	*Rallicola*
Musophagiformes				
Gruiformes				*Psophiicola*, *Rallicola*
Gaviiformes				
Sphenisciformes				
Procellariiformes				
Ciconiiformes				
Suliformes				
Pelecaniformes				
Charadriiformes				*Rallicola*
Opisthocomiformes				*Georgeiella*, *Osculotes*
Caprimulgiformes				
Phaethontiformes				
Eurypygiformes				*Rallicola*
Accipitriformes		*Acutifrons*, *Degeeriella*	*Aegypoecus*, *Craspedorrhynchus*	
Strigiformes			*Strigiphilus*	
Coliiformes				
Leptosomiformes			*Clayiella*	
Trogoniformes	*Guimaraesiella*, *Harpactrox*	*Trogoniella*, *Trogoninirmus*	*Vinceopterus*	
Bucerotiformes: *Upupidae*		*Upupicola*		
Bucerotiformes: *Phoeniculidae*		*Georgeiella*	*Philopterus*	
Bucerotiformes: *Bucerotidae* + *Bucorvidae*		*Bucerocophorus*, *Buceroemersonia*, *Buceronirmus*		
Coraciiformes: *Meropidae*	*Aporisticeras*, *Meropoecus*, *Meropsiella*			
Coraciiformes: *Coraciidae*		*Capraiella*		
Coraciiformes: *Brachypteraciidae*	*Buerelius*			

...Continued on the next page

APPENDIX 2. (Continued)

Host group	*Brueelia*-complex	*Degeeriella*-complex	*Philopterus*-complex	*Rallicola*-complex
CORACIIFORMES: *TODIDAE*				
CORACIIFORMES: *MOMOTIDAE*	*Motmotnirmus*		*Clayiella*	
CORACIIFORMES: *ALCEDINIDAE*		*Emersoniella*	*Alcedoecus*	
GALBULIFORMES		*Picicola*	*Mayriphilopterus*	*Bobdalgleishia*
PICIFORMES: *CAPITONIDAE*, *LYBIIDAE*, *MEGALAIMIDAE*, *RAMPHASTIDAE*	*Traihoriella*	*Austrophilopterus*		
PICIFORMES: *INDICATORIDAE*				
PICIFORMES: *PICIDAE*	*Brueelia*	*Picicola*		*Rallicola*
CARIAMIFORMES				
FALCONIFORMES		*Acutifrons*, *Degeeriella*	*Craspedorrhynchus*	
PSITTACIFORMES				
PASSERIFORMES: *ACANTHISITTI*			*Philopteroides*	
PASSERIFORMES: **SUBOSCINES**	*Brueelia*, *Guimaraesiella*, *Psammonirmus*	*Cotingacola*, *Picicola*	*Debeauxoecus*, *Tyranniphilopterus*	*Rallicola*
PASSERIFORMES: *MENURIDAE*	*Guimaraesiella*			
PASSERIFORMES: *CLIMACTERIDAE*			*Philopteroides*	
PASSERIFORMES: *MALURIDAE*			*Philopterus*	
PASSERIFORMES: **CORVIDES**	*Brueelia*, *Corvonirmus*, *Guimaraesiella*, *Hecatrishula*, *Indoceoplanetes*, *Maculinirmus*, *Manucodicola*, *Nemuus*, *Olivinirmus*, *Priceiella*, *Saepocephalum*, *Sturnidoecus*, *Teinomordeus*, *Titanomessor*	*Picicola*, *Sarahcultrix*	*Australophilopterus*, *Cinclosomicola*, *Corcorides*, *Paraphilopterus*, *Philopterus*, *Philopteroides*, *Tritrabeculus*	*Huiacola*, *Rallicola*
PASSERIFORMES: **PASSERIDA**	*Acronirmus*, *Aratricerca*, *Bizarrifrons*, *Brueelia*, *Buphagoecus*, *Ceratocista*, *Guimaraesiella*, *Mirandofures*, *Osculonirmus*, *Priceiella*, *Resartor*, *Rostrinirmus*, *Schizosairhynchus*, *Sturnidoecus*, *Timalinirmus*, *Turdinirmoides*, *Turdinirmus*	*Picicola*	*Cincloecus, Philopterus, Philopteroides*	

Appendix 3.

Summary of the parasitophyletic rules, with comments on their validity within **Phthiraptera**. For examples and discussions, including justification for our assessment of validity, see the main text.

Rule	Summary	Validity
Ass-Knorr's rule	Adaptations of lice occur in two steps: [1] local adaptation to the host; [2] co-speciation with the host	Likely valid, but largely untested
Breev's rule	As the host population declines, the louse population also declines (at a higher rate)	Unclear, never formally tested
Clay's rule	Closely related hosts tend to have closely related lice	Largely valid for many groups of hosts and lice, but not universal
Cope's rule	Body size increases along an evolutionary lineage of lice	Currently untestable, as almost no fossil lice are known; likely overruled by Harrison's rule
Dogiel's rule	Host switching is not possible from a rare host species to a common host species	Unclear, never tested
Dubinin's rule	Number of louse genera parasitizing a host is positively correlated with the number of different feather types/tracts on this host	Possibly valid, but untested
Eichler's rule	When comparing different groups of hosts, the diversity of host and louse taxa are positively correlated	Largely valid
Fahrenholz' rule	Host and louse phylogenies are strictly correlated, allowing conclusions about relationships in one taxon to be drawn based on relationships in the other taxon	Valid in some cases, but not universally or strictly
Grunin's rule	Some lice only occur on hosts that have a large population size	Possibly valid, but data insufficient
Harrison's rule	Within a host group, the size of congeneric lice tend to correlate with the size of their hosts	Largely valid for at least wing lice, but not applicable to e.g. body lice
Hopkins' rule	Close relationships between hosts groups that share one genus of lice is possible, two genera probable, and three genera certain	Invalid
Janiszewska's rule	Common host species have more diverse louse faunas than rare host species	Unclear, but possibly of limited validity
Kéler's rule	Large population increases of one louse species suppresses the other populations of lice on the same host	Possibly valid, but data insufficient
Macronectes rule	Host species that readily disperse are parasitized by a diverse 'thrown-together' louse fauna	Limited validity, but poorly defined
Rubcov-Ass' rule	The tempo of evolution is higher in hosts than in lice	Likely invalid
Samšiňák's rule	Differences in evolutionary rates among host taxa may be important for other parasitophyletic rules	Poorly defined; unclear
Szidat's rule	The degree of evolutionary advancement in the lice is correlated with the evolutionary advancement of the host	Invalid as used; valid (but trivial) as stated
Timmermann's rule	Within a host group, aberrant hosts are parasitized by aberrant lice	Invalid
Złotorzycka's rule	Within a host group, number of genera parasitizing a host is correlated with the gross body size of the host	Invalid

APPENDIX 4.

Comparison of head dimensions and indices of males of three polyxenous species of lice in the *Brueelia*-complex, showing the variation and overlap in head indices among specimens from different hosts. Head index (HI) is calculated by measuring the length of the head along the midline (HL) and the width of the head at the widest point, typically the temples (HW); then HI = HW/HL. Measurements were taken from photos in ImageJ 1.52a (Wayne Rasband, National Institutes of Health, United States, available from <https://imagej.nih.gov/ij/>; accessed 2021.04.14). Note that as the louse with the longest head does not necessarily have the widest head, the given values of HI cannot be derived directly from the ranges of HL and HW. HI was calculated individually for each specimen measured. All measurements are in millimeters. Specimens measured are the same as those used by Gustafsson & Bush (2017); see this publication for collection and deposition data of the examined specimens.

Louse species	Host species	*n* Lice	HL range	HW range	HI range
Acronirmus gracilis	*Cecropis abyssinica*	1	0.34	0.26	0.76
	Cecropis badia	2	0.32–0.34	0.24–0.25	0.73–0.74
	Cecropis daurica erythropygia	1	0.33	0.23	0.70
	Cecropis daurica rufula	1	0.36	0.26	0.72
	Cecropis senegalensis saturiator	3	0.34–0.36	0.25	0.69–0.73
	Delichon dasypus dasypus	2	0.33–0.34	0.24	0.70–0.71
	Delichon urbicum urbicum	15	0.34–0.37	0.23–0.26	0.63–0.74
	Hirundo aethiopica	2	0.31–0.35	0.23–0.26	0.72–0.74
	Hirundo angolensis	2	0.34	0.25	0.74
	Hirundo rustica rustica	15	0.34–0.37	0.25–0.27	0.71–0.76
	Hirundo rustica savignii	1	0.35	0.26	0.74
	Hirundo rustica tytleri	1	0.33	0.24	0.72
	Hirundo tahitica javanica	2	0.31–0.32	0.24	0.74–0.77
	Riparia chinensis	1	0.34	0.26	0.76
Guimaraesiella papuana	*Cicinnurus magnificus*	10	0.38–0.42	0.35–0.39	0.90–0.93
	Paradisaea apoda novaeguineae	4	0.41–0.44	0.39–0.41	0.91–0.95
	Paradisaea minor finschi	8	0.41–0.45	0.37–0.43	0.90–0.98
	Paradisaea raggiana augustaevictoriae	15	0.40–0.45	0.37–0.41	0.89–0.96
	Paradisaea raggiana raggiana	6	0.42–0.46	0.37–0.42	0.88–0.93
	Paradisaea raggiana salvadorii	13	0.38–0.45	0.34–0.42	0.88–0.94
	Paradisaea rubra	5	0.41–0.45	0.39–0.42	0.92–0.95
	Parotia lawesi	11	0.37–0.40	0.35–0.38	0.90–0.96
	Pitohui ferrugineus	2	0.39–0.40	0.39–0.40	0.97–1.02
	Ptiloris magnificus	9	0.40–0.45	0.36–0.42	0.90–0.96
Traihoriella laticeps	*Andigena nigrirostris occidentalis*	1	0.44	0.49	1.13
	Andigena nigrirostris spilorhynchus	2	0.42–0.43	0.49	1.14–1.15
	Aulacorhynchus haematopygus	4	0.42–0.43	0.48–0.49	1.11–1.16
	Aulacorhynchus prasinus albivitta	5	0.41–0.42	0.46–0.50	1.12–1.17
	Aulacorhynchus prasinus atrigularis	3	0.40–0.43	0.45–0.49	1.11–1.16
	Aulacorhynchus prasinus dimidiatus	1	0.43	0.49	1.14
	Aulacorhynchus prasinus maxillaris	1	0.41	0.47	1.13
	Aulacorhynchus sulcatus erythrognathus	1	0.38	0.47	1.22
	Aulacorhynchus sulcatus sulcatus	3	0.39–0.40	0.47	1.17–1.18

Appendix 5.

Summary of head dimensions and head indices of the *Anatoecus* taxa treated by Złotorzycka (1970), from which the data is derived. Head index (HI) is calculated by measuring the length of the head along the midline (HL) and the width of the head at the widest point, typically the temples (HW); then HI = HW/HL. All measurements are in millimeters. Louse taxonomy follows Złotorzycka (1970), which is not endorsed here. Subspecific taxa for which no measurements were given by Złotorzycka (1970) are not included here. Note that the only difference given by Złotorzycka (1970) between females of *Benatoecus* and *Anatoecus* is body size (1.4–1.7 mm for *Anatoecus* and 1.7–2.0 mm for *Benatoecus*). Exceptions were apparently known to Złotorzycka, but considered "exceptional". In each purported species pair on the same host, females were presumably identified by a combination of body length, cephalic index, the shape of the posterior end of the abdomen, and the shape of the dorsal anterior plate. However, in cases like *Anatoecus icterodes pustulosus* Złotorzycka, 1970, and *Anatoecus dentatus* ssp., where only a single male and a single female were found on the same host individual, it is not always clear how the identity of the female was established; Złotorzycka (1970: 31) also doubted the identity of single females in some cases. As we have not seen Złotorzycka's specimens, we cannot assess whether this is sufficient, nor if all female specimens are correctly identified. The data is therefore here presented under the assumption that Złotorzycka (1970) correctly identified her species according to the taxonomy she proposed.

Louse taxon	Host species	*n* Lice measured	HL range	HW range	HI range
***Anatoecus cygni* (males)**					
A. c. bracteatus	*Cygnus cygnus*	10	0.36–0.38	0.41–0.43	0.84–0.90
***Anatoecus dentatus* (males)**					
A. d. abdominalis	*Anser fabalis*	1	0.45	0.44	1.02
A. d. castaneus	*Anas querquedulae*	5	0.40–0.46	0.38–0.43	1.03–1.10
A. d. clangulae	*Clangula hyemalis*	2	0.45–0.47	0.43	1.05–1.09
A. d. dentatus	*Anas platyrhynchos*	10	0.43–0.48	0.40–0.43	1.05–1.15
A. d. magnicornutus	*Cygnus olor*	2	0.44–0.45	0.44–0.45	1.00
A. d. prehensus	*Anas crecca*	2	0.45–0.46	0.40–0.42	1.10–1.13
A. d. simplicatus	*Anas penelope*	1	0.44	0.39	1.13
***Anas icterodes* (males)**					
A. i. bipunctatus	*Mergus merganser*	2	0.42–0.44	0.36–0.39	1.13–1.17
A. i. boschadis	*Anas platyrhynchos*	10	0.43–0.45	0.39–0.41	1.10–1.13
A. i. brantae	*Branta ruficollis*	1	0.39	0.39	1.00
A. i. difficilis	*Aythya ferina*	2	0.43–0.44	0.40	1.08–1.10
A. i. dissensus	*Bucephala clangula*	7	0.40–0.43	0.37–0.41	1.05–1.16
A. i. eichleri	*Anas crecca*	10	0.42–0.44	0.38–0.40	1.08–1.13
A. i. icterodes	*Mergus serrator*	1	0.43	0.38	1.13
A. i. islandicus	*Bucephala islandica*	1[1]	0.43	0.39	1.10
A. i. natatorum	*Clangula hyemalis*	2	0.45–0.46	0.42–0.43	1.07
A. i. oloris	*Cygnus olor*	10	0.41–0.43	0.42–0.44	0.95–1.02
A. i. parvus	*Anas querquedulae*	6	0.41–0.44	0.38–0.40	1.08–1.16
A. i. pustulosus	*Netta rufina*	1	0.44	0.42	1.05
A. i. tadornae	*Tadorna tadorna*	1	0.46	0.44	1.05

...Continued on the next page

APPENDIX 5. (Continued)

Louse taxon	Host species	*n* Lice measured	HL range	HW range	HI range
A. i. tergalis	*Anser fabalis*	5	0.43–0.48	0.41–0.45	1.02–1.07
A. i. ssp.	*Anas platyrhynchos*	1	0.42	0.37	1.14
***Anatoecus cygni* (females)**					
A. c. bracteatus	*Cygnus cygnus*	9	0.42–0.44	0.47–0.51	0.84–0.90
***Anatoecus dentatus* (females)**					
A. d. brunneopygus	*Branta leucopsis*	1	0.47	0.49	0.96
A. d. castaneus	*Anas querquedulae*	8	0.48–0.50	0.44–0.47	1.04–1.14
A. d. clangulae	*Clangula hyemalis*	2	0.51–0.53	0.48–0.50	1.06
A. d. cognatus	*Anas platyrhynchos*	2	0.51	0.48	1.06
A. d. complicatus	*Anas penelope*	2	0.48–0.50	0.39–0.45	1.07–1.28
A. d. dentatus	*Anas platyrhynchos*	10	0.50–0.52	0.45–0.49	1.02–1.11
A. d. ferrugineus	*Anas clypeata*	1	0.49	0.43	1.14
A. d. gratus	*Bucephala clangula*	2	0.50–0.51	0.43–0.48	1.06–1.16
A. d. longicephalus	*Anas strepera*	2	0.51–0.52	0.46	1.11–1.13
A. d. magnicornutus	*Cygnus olor*	10	0.41–0.43	0.42–0.44	0.96–1.02
A. d. prehensus	*Anas crecca*	1	0.50	0.45	1.11
A. d. ssp.	*Melanitta nigra*	1	0.52	0.43	1.21
A. d. ssp.	*Netta rufina*	1	0.50	0.48	1.04
***Anatoecus icterodes* (females)**					
A. i. adustus	*Anser anser*	1	0.45	0.43	1.05
A. i. boschadis	*Anas platyrhynchos*	10	0.43–0.51	0.42–0.48	1.02–1.14
A. i. brunneiceps	*Anser cygnoides*	1	0.42	0.41	1.02
A. i. difficilis	*Aythya ferina*	3	0.47–0.50	0.43–0.46	1.04–1.09
A. i. discludus	*Anas platyrhynchos*	7	0.47–0.50	0.46–0.47	1.02–1.09
A. i. dissensus	*Bucephala clangula*	3	0.45–0.49	0.42–0.47	1.04–1.12
A. i. eichleri	*Anas crecca*	10	0.47–0.50	0.42–0.44	1.05–1.14
A. i. icterodes	*Mergus serrator*	1	0.48	0.42	1.14
A. i. natatorum	*Clangula hyemalis*	1	0.51	0.47	1.09
A. i. oloris	*Cygnus olor*	10	0.45–0.48	0.45–0.49	0.96–1.02
A. i. parvus	*Anas querquedulae*	10	0.45–0.49	0.40–0.43	1.09–1.17
A. i. simplicatus	*Anas penelope*	2	0.48–0.49	0.42–0.43	1.14
A. i. solivagus	*Anas strepera*	1	0.48	0.45	1.07
A. i. tadornae	*Tadorna tadorna*	2	0.49–0.50	0.48–0.49	1.00–1.04
A. i. tergalis	*Anser fabalis*	7	0.48–0.50	0.46–0.48	1.02–1.04
A. i. ssp.	*Melanitta fusca*	1	0.47	0.43	1.09

[1] Two specimens were examined by Złotorzycka (1970: 35), but one was damaged and lacked a head. Consequently, no head measurements were given for the second specimen.

Appendix 6.

Changes in the classification of flamingo and duck lice over time. For simplicity, the taxa *Benatoecus* Złotorzycka, 1970 and *Cereopsoecus* Kéler, 1960, both currently considered synonyms of *Anatoecus* and occurring exclusively on anseriform hosts, are not included in this table. Dashes ("–") denote instances where a publication was limited to some of the groups included here.

Classification	**Genus 1**		**Genus 2**		**Genus 3**		**Genus 4**	
	Flamingoes	Ducks	Flamingoes	Ducks	Flamingoes	Ducks	Flamingoes	Ducks
Hopkins (1942)	*Colpocephalum* s.l.	*Colpocephalum* s.l.	*Trinoton*	*Trinoton*	*Anatoecus*	*Anatoecus*	*Anaticola*	*Anaticola*
Eichler (1948*b*)	*Scalarisoma*	*Anseriphilus*	*Ewingella*	*Trinoton*	*Anatoecus*	*Anatoecus*	*Anaticola*	*Anaticola*
Hopkins & Clay (1952)	*Colpocephalum*	*Ciconiphilus*	*Trinoton*	*Trinoton*	*Anatoecus*	*Anatoecus*	*Anaticola*	*Anaticola*
Timmermann (1957)	*Colpocephalum* s. l.	*Colpocephalum* s.l.	*Trinoton*	*Trinoton*	*Anatoecus*	*Anatoecus*	*Anaticola*	*Anaticola*
Eichler (1963)	'*[Scalarisoma]*'[1]	*Anseriphilus*	*Ewingella*	*Trinoton*	*Flamingobius*	*Anatoecus*	*Anaticola*	*Anaticola*
Eichler (1973)	*Scalarisoma*	*Anseriphilus*	*Ewingella*	*Trinoton*	*Flamingobius*	*Anatoecus*	*Anaticola* [but 'primitive']	*Anaticola*
Clay (1974)	*Colpocephalum*	–	*Trinoton*	–	*Anatoecus*	–	*Anaticola*	–
Eichler & Vasjukova (1980)	*Scalarisoma*	*Anseriphilus*	*Ewingella*	*Trinoton*	*Flamingobius*	*Anatoecus*	*Anaticola* [but special species group]	*Anaticola*
Eichler (1982)	*Tendeiroella*[2]	–	–	–	–	–	–	–
Eichler (1990)	*Tendeiroella*	*Anseriphilus*	*Ewingella*	*Trinoton*	*Flamingobius*	*Anatoecus*	*Anaticola* [but special species group]	*Anaticola*
Price *et al*. (2003)	*Colpocephalum*	*Ciconiphilus*	*Trinoton*	*Trinoton*	*Anatoecus*	*Anatoecus*	*Anaticola*	*Anaticola*
Mey (2009)	*Tendeiroella*	*Anseriphilus*	*Ewingella*	*Trinoton*	*Flamingobius*	*Anatoecus*	*Anaticola*	*Anaticola*

[1] *Scalarisoma* and *Colpocephalum* were not mentioned in Eichler's discussion on the louse evidence for the relationships between flamingos and ducks (Eichler 1963: 205), but *Scalarisoma* was listed within hooked parentheses in the classification (1963: 164). These parentheses denote 'valid genera with invalid names' (1963: 160). Hopkins & Clay (1952) incorrectly argued that this name was never described, and thus is unavailable. However, the genus is monotypic and Kéler (1939) gave a single morphological character ('the striking dimorphism'), making the genus name technically available.

[2] This genus was described under the mistaken assumption that *Scalarisoma* is a *nomen nudum*; other flamingo lice were not discussed by Eichler (1982).

APPENDIX 7.

Overview of the practical application of Fahrenholz' rule on the species- and subspecies-level of louse taxonomy. We here compare the number of host specialists and host generalists in various groups of lice as understood by different authors. Each author is listed separately, in alphabetical order. The numbers on these lines summarize the data for each author individually. Publications were chosen based on the following criteria: [1] publications are taxonomic revisions of one or more groups that treat at least some previously known species (whether or not new species are included); [2] publications include at least five species (10 for R. D. Price, due to his large number of publications); [3] publication date is between Eichler (1963) and Eichler (1990); [4] only publications where the author in question is first author are considered. For each publication, we list the total number of species-group taxa treated (*n* Sp), the number of species-group taxa that were listed as restricted to a single host species (*n* HS, host specialists), and the number of species-group taxa that were listed as occurring on more than one host (*n* HG, host generalists). For simplicity, species and subspecies are treated together. Specimens explicitly stated as being suspected stragglers or contaminants are not included. Specimens listed as 'sp.' or 'ssp.' followed by a number in the original publications are treated as separate species; specimens listed simply as 'sp.' are not. Host taxonomy follows the original author, even in cases where this has subsequently changed.

Publication	Louse group treated	*n* Sp	*n* HS	*n* HG
Clay, Theresa		**128**	**88**	**39 (30.5 %)**
Clay (1966)	*Myrsidea*	21	16	5
Clay & Moreby (1967)	Various groups from Antarctica	45	26	19
Clay (1968)	*Myrsidea*	15	10	5
Clay (1973)	*Pectinopygus*	18	17	1
Clay (1974*a*)	Lice on flamingoes	10	5	5
Clay (1974*b*)	*Strigiphilus*	6	5	1
Clay (1976*b*)	*Boopia*	5	3[1]	1
Clay (1981)	*Boopia*	8	6	2
Eichler, Wolfdietrich		**89**	**89**	**0 (0 %)**
Eichler & Złotorzycka (1963)	"*Colpocephalidae*"	9	9	0
Eichler & Vasjukova (1980)	*Anaticola*	48	48	0
Eichler & Vasjukova (1981)	*Trinoton*	32	32	0
Price, Roger D.		**275**	**177**	**98 (35.6 %)**
Price & Beer (1963*a*)	*Colpocephalum*	25	13	12
Price & Beer (1963*b*)	*Kurodaia*	11	6	5
Price & Beer (1964)	*Colpocephalum*	14	9	5
Price & Beer (1965)	*Colpocephalum*	43	33	10
Price & Beer (1967)	*Heteromenopon*	12	4	8
Price (1970)	*Heleonomus*	10	7	3
Price (1971)	*Holomenopon*	16	8	8
Price & Emerson (1971)	*Geomydoecus*	45	36	9
Price (1972)	*Geomydoecus*	10	8	2
Price (1974)	*Pseudomenopon*	17	11	6
Price (1977)	*Menacanthus*	28	8	20

...Continued on the next page

Appendix 7. (Continued)

Publication	Louse group treated	*n* Sp	*n* HS	*n* HG
Price & Hellenthal (1981)	*Geomydoecus*	16	15	1
Price & Clayton (1983)	*Psittaconirmus*	11	8	3
Price & Hellenthal (1989)	*Geomydoecus*	17	11	6
Złotorzycka, Jadwiga		**562**	**559**	**3 (0.5 %)**
Złotorzycka (1963*a*)	*Actornithophilus*	9[2]	9	0
Złotorzycka (1963*b*)	*Falcolipeurus*	7	7	0
Złotorzycka[3] (1964*a*)	*Philopterus*-complex	51	51	0
Złotorzycka (1964*b*)	*Menoponidae*	32	32	0
Złotorzycka (1964*c*)	*Brueelia*-complex, *Penenirmus*-complex	88	88	0
Złotorzycka (1965)	*Menoponidae*, *Ricinidae*, *Degeeriella*-complex	69	68	1[4]
Złotorzycka (1967)	*Quadraceps*-complex	136	136	0
Złotorzycka (1968*b*)	*Austromenopon*	43	42	1[5]
Złotorzycka (1970)	*Anatoecus*	49	49	0
Złotorzycka (1973)	*Myrsidea*	9	8	1
Złotorzycka (1974)	*Strigiphilus*	18[6]	18	0
Złotorzycka & Lucińska (1975)	*Philopterus*	7	7	0
Złotorzycka & Lucińska (1976)	*Philopterus*	44	44	0

[1] Clay's discussion on the host range of *Phacogalia brevispinosa* (Harrison & Johnston 1916) is unresolved. The species may occur on two host species or be limited to one.

[2] Złotorzycka asserted that previous attempts to synonymize some of the species in this genus are erroneous, but gave no detailed argument why.

[3] In this and the subsequent publications in the same series, Złotorzycka repeatedly restricted type host species for lice that were originally described based on material from more than one host species. Invariably, this was not based on having examined any specimens of the type series, and in most cases no specimens from any of the original hosts were examined. The specimens from non-type hosts were 'assumed', 'presumed' or 'supposed' to have belonged to other, undescribed, species, but no argument for these assertions were given.

[4] Złotorzycka listed "*Troglodytes t. troglodytes* (L.) or *Regulus regulus regulus* (L.)" as type hosts for *Ricinus frenatus* (Burmeister, 1838), but did not discuss whether she considered the lice from these two hosts conspecific.

[5] Złotorzycka discussed the host distribution of *Austromenopon lutescens* (Burmeister, 1838), and noted that morphological differences between specimens from different hosts had previously been reported. However, she did not explicitly state that she regarded the populations on all different hosts as different species, and we therefore treat this as a (doubtful) case where Złotorzycka considered these populations to be conspecific and thus *A. lutescens* as being polyhospital.

[6] Additional non-European species were listed, but not discussed. They are not included in this count, as it is not clear from this list whether Złotorzycka considered any of them as host generalists. Her recognition of subspecies of some of these non-European species of *Strigiphilus* Mjöberg, 1910, indicates that all species would have been considered host specialists, sometimes to host subgenus level, had they been included.

APPENDIX 8.

Known host associations of three species of *Guimaraesiella* Eichler, 1949, based on genetic data. At the time of writing, all these louse species are undescribed, and are here simply numbered. Host taxonomy follows Clements *et al*. (2021). This list does not include host specimens that have only been examined morphologically, as the morphology of these three *Guimaraesiella* species is similar, and genetic data may be needed for correct identification.

Louse taxon	Host species	Host family	Source
Guimaraesiella sp. 1	*Aleadryas rufinucha*	*Pachycephalidae*	Bush *et al*. (2016)
	Anthipes monileger	*Muscicapidae*	Tian *et al*. (2022)
	Bradypterus cinnemomeus	*Locustellidae*	Bush *et al*. (2016)
	Chaetorhynchus papuensis	*Dicruridae*	Bush *et al*. (2016)
	Copsychus luzionensis	*Muscicapidae*	Bush *et al*. (2016)
	Cossypha anomala	*Muscicapidae*	Bush *et al*. (2016)
	Cossypha caffra	*Muscicapidae*	Bush *et al*. (2016)
	Culicicapa ceylonensis	*Stenostiridae*	Bush *et al*. (2016)
	Cyornis hainanus	*Muscicapidae*	Tian *et al*. (2022)
	Cyornis rufigastra	*Muscicapidae*	Bush *et al*. (2016)
	Ficedula hyperythra	*Muscicapidae*	Bush *et al*. (2016)
	Ficedula tricolor	*Muscicapidae*	Bush *et al*. (2016)
	Ficedula zanthopygia	*Muscicapidae*	Bush *et al*. (2016)
	Iduna similis	*Acrocephalidae*	Bush *et al*. (2016)
	Peneothello cyanus	*Eopsaltridae*	Bush *et al*. (2016)
	Peneothello sigillata	*Eopsaltridae*	Bush *et al*. (2016)
	Periparus elegans	*Paridae*	Bush *et al*. (2016)
	Phoenicurus fuliginosus	*Muscicapidae*	Bush *et al*. (2016)
	Phylloscopus burkii	*Phylloscopidae*	Tian *et al*. (2022)
	Phylloscopus inornatus	*Phylloscopidae*	Bush *et al*. (2016)
	Pitta moluccensis	*Pittidae*	Lee *et al*. (2022)
	Pogonocichla stellata	*Muscicapidae*	Bush *et al*. (2016)
	Pseudalethe fuellerborni	*Muscicapidae*	Bush *et al*. (2016)
	Pteruthius melanotis	*Vireonidae*	Tian *et al*. (2022)
	Rhipidura albicollis	*Rhipiduridae*	Tian *et al*. (2022)
	Rhipidura nigrocinnamomea	*Rhipiduridae*	Bush *et al*. (2016)
	Sericornis nouhuysi	*Acanthizidae*	Bush *et al*. (2016)
	Sericornis perspicillata	*Acanthizidae*	Bush *et al*. (2016)
	Sheppardia sharpei	*Muscicapidae*	Bush *et al*. (2016)
	Sitta frontalis	*Sittidae*	Bush *et al*. (2016)
	Terpsiphone incei	*Monarchidae*	Tian *et al*. (2022)
	Terpsiphone paradisi	*Monarchidae*	Bush *et al*. (2016)
Guimaraesiella sp. 2	*Ailuroedus crassicornis*	*Ptilonorhynchidae*	Bush *et al*. (2016)
	Chlamydera nuchalis	*Ptilonorhynchidae*	Bush *et al*. (2016)
	Colluricincla harmonica	*Colluricinclidae*	Bush *et al*. (2016)
	Lichenostomus penicillatus	*Meliphagidae*	Bush *et al*. (2016)
	Meliphaga lewini	*Meliphagidae*	Bush *et al*. (2016)
	Oriolus chinensis	*Oriolidae*	Lee *et al*. (2022)
	Pachycephala pectoralis	*Pachycephalidae*	Bush *et al*. (2016)

...Continued on the next page

Appendix 8. (Continued)

Louse taxon	Host species	Host family	Source
	Psophodes olivaceus	*Psophodidae*	Bush *et al*. (2016)
Guimaraesiella sp. 3	*Bleda canicapillus*	*Pycnonotidae*	Bush *et al*. (2016)
	Bleda eximius	*Pycnonotidae*	Bush *et al*. (2016)
	Bleda syndactylus	*Pycnonotidae*	Bush *et al*. (2016), Light *et al*. (2016)
	Bleda ugandae	*Pycnonotidae*	Light *et al*. (2016)
	Criniger barbatus	*Pycnonotidae*	Bush *et al*. (2016)
	Eurillas latirostris	*Pycnonotidae*	Bush *et al*. (2016)
	Malimbus nitens	*Ploceidae*	Bush *et al*. (2016)
	Neocossyphus peonsis	*Turdidae*	Bush *et al*. (2016)
	Nicator chloris	*Nicatoridae*	Bush *et al*. (2016)
	Phyllastrephus albigularis	*Pycnonotidae*	Bush *et al*. (2016)
	Phyllastrephus icterinus	*Pycnonotidae*	Bush *et al*. (2016), Light *et al*. (2016)
	Stelgidillas gracilirostris	*Pycnonotidae*	Bush *et al*. (2016)